AA0130008 CH-4
June 12, 2002

INTERFACE CONTROL DOCUMENT (ICD)

FOR

AWIPS - NATIONAL ENVIRONMENTAL SATELLITE, DATA AND INFORMATION SERVICE (NESDIS)

Prepared by
AWIPS Program Office

Revised by
NWS Office of Science and Technology,
Systems Engineering Center

THIS PAGE INTENTIONALLY LEFT BLANK

RECORD OF CHANGES

This page provides a record of all changes and revisions to this document. Changes are identified by the change identifier to the right of the document number on each change page (e.g., CH-1 for Change 1, CH-2 for Change 2, etc.). Revisions after the initial issue are identified by the revision identifier to the right of the document number on each page of the document (e.g., R1 for Revision 1, R2 for Revision 2, etc.). The initial issue of the document is considered Revision 0. Change packages only include those pages affected by the change. Revisions are a reprint of the complete document incorporating all previous changes.

Version	Document Number	Date
Revision 0 (Initial issue)	AAO130008	March, 1995
Change 1	AAO130008 CH-1	November 15, 1996
Change 2	AAO130008 CH-2	August 1, 1999
Change 3	AAO130008 CH-3	February 15, 2000
Change 4	AA0130008 CH-4	June 12, 2002

THIS PAGE INTENTIONALLY LEFT BLANK

LIST OF EFFECTIVE PAGES

SECTION	PAGE NUMBERS	CHANGE/REVSION
Table of Contents	i thru iii	CH-4
	1	CH-4
	2 thru 4	CH-2
	5 thru 6	CH-4
	7 thru 9	CH-2
	10 thru 11	CH-3
	12 thru 39	CH-4

EXHIBIT A	A-1 thru A-6	CH-1

EXHIBIT B	B-1 thru B-8	CH-1
EXHIBIT C	C-1 thru C-2	Rev 0
	Page 1 thru Page 16	Rev 0

EXHIBIT D	D-1 thru D-2	Rev 0
	Page 1 thru Page 70	Rev 0

EXHIBIT E	E-1 thru E-4	CH-1
	i thru ii	CH-1
	1-1 thru 1-2	CH-1
	2-1 thru 2-24	CH-1
	3-1 thru 3-4	CH-1
	A-1 thru A-18	CH-1
	B-1 thru B-2	CH-1

EXHIBIT F	F-1 thru F-2	CH-1
	Cover	CH-1
	Table of Contents	CH-1
	Page 1 thru Page 42	CH-1

EXHIBIT G	G-1 thru G-2	CH-1
	iii thru vii	CH-1
	Page 1	CH-1
	Page 3	CH-1
	Page 5	CH-1
	Pages 7 thru 11	CH-1
	Page 13	CH-1
	Page 15	CH-1
	Pages 17 thru 25	CH-1
	Pages 27 thru 49	CH-1
	Pages 51 thru 58	CH-1

THIS PAGE INTENTIONALLY LEFT BLANK

TABLE OF CONTENTS

1.0 SCOPE 1
1.1 BACKGROUND 1

2.0 REFERENCE DOCUMENTS 1
2.1 STANDARDS PRECEDENCE 4

3.0 INTERFACE CHARACTERISTICS 5
3.1 PHYSICAL LAYER 5
3.1.1 BASEBAND MEDIUM 5
3.2 DATA LINK LAYER 5
3.2.1 MEDIA ACCESS CONTROL SUBLAYER 5
3.2.2 LLC SUBLAYER 6
3.3 NETWORK LAYER 6
3.4 TRANSPORT LAYER 6
3.5 SESSION LAYER 6
3.6 PRESENTATION LAYER 6
3.7 APPLICATION LAYER 6
3.7.1 TELNET PROTOCOL 7
3.7.2 FILE TRANSFER PROTOCOL (FTP) 7

4.0 PRODUCT STRUCTURE 10
4.1 NESDIS INTERFACE PRODUCT IDENTIFICATION 10
4.2 REMAPPED GOES SATELLITE PRODUCT FORMAT SPECIFICATION 14
4.3 HEADER DEFINITION 14
4.4 DEFINITION OF IMAGER CALIBRATION COEFFICIENTS ARRAYS 35
4.5 RECORD DEFINITION 35
4.6 END OF PRODUCT 36
4.7 DESCRIPTION OF AWIPS MAP REGISTRATION METHODOLOGY . . 36
4.7.1 AWIPS OVERLAY MAPS ARE BASED ON AN ELLIPTICAL EARTH 36
4.7.2 AWIPS IMAGE CORNER POINTS CALCULATION AND SPHERICAL EARTH RADIUS IMPORTANCE 36
4.7.3 AWIPS IMAGE PRODUCT RESOLUTIONS CALCULATION . . . 37

EXHIBIT A A-1

EXHIBIT B B-1

EXHIBIT C C-1

EXHIBIT D D-1

EXHIBIT E E-1

EXHIBIT F F-1

EXHIBIT G G-1

FIGURES

FIGURE 1 2
FIGURE 2 9
FIGURE 3 10
FIGURE 4 14

TABLES

Table 4.0 WMO Abbreviated Heading - T_2 for Satellite Products 10
Table 4.1 WMO Abbreviated Heading - A_1 for Satellite Products 11
Table 4.2 WMO Abbreviated Heading - A_2 for Satellite Products 11
Table 4.3A WMO Abbreviated Heading - ii for Remapped GOES Satellite Products 12
Table 4.3B WMO Abbreviated Heading - ii for Non-GOES Satellite Products (and Meteosat/GOES E/GOES W/GMS composite) . . . 13
Table 4.4A Product Definition Block (PDB) (Header) - Lambert Conformal and Polar Stereographic Projection. 15
Table 4.4B Product Definition Block (PDB) (header) - Mercator Projection 17
Table 4.5 Creating Entity (PDB byte 2) 19
Table 4.6 Sector ID (PDB byte 3) 19
Table 4.7 Physical Element (PDB byte 4) for Remapped GOES Satellite Products, Non-GOES Satellite Products, and Meteosat/GOES E/GOES W/GMS composite 19
Table 4.8A Latitude/Longitude Dimensions of Remapped GOES/Composite Products (GOES 8-11) 22
Table 4.8B Latitude/Longitude Dimensions of Remapped GOES/Composite Products (GOES 12 and N) 26
Table 4.9A Size and Format Specifications of East CONUS Lambert Maps 30
Table 4.9B Size and Format Specifications of West CONUS Lambert Maps 30
Table 4.10A Size and Format Specifications of Puerto Rico Mercator Maps 31
Table 4.10B Size and Format Specifications of Hawaii Mercator Maps 31
Table 4.11 Size and Format Specifications of Alaska PSG Maps 31

Table 4.12 Size and Format Specifications of NH PSG Composite Maps 32
Table 4.13 Size and Format Specifications of Super National PSG Composite Maps 32
Table 4.14 Size and Format Specifications of Alaska National And Puerto Rico National PSG Maps 33
Table 4.15 Size and Format Specifications of Hawaii National Mercator Maps 33
Table 4.16 Size and Format Specifications of Multi-Satellite PSG Composite Maps 34

1.0 SCOPE

This document defines the interface for the National Environment Satellite Data and Information Service (NESDIS), Geostationary Operational Environmental Satellite (GOES) and non-NOAA satellite imagery. The purpose of this interface is to transmit data from NESDIS to the AWIPS Network Control Facility (NCF) for AWIPS Communications Network point-to-multipoint distribution to AWIPS and NOAAPORT sites. The AWIPS/NESDIS interface for non-imagery satellite products (e.g., BUFR Soundings) is defined in the ICD for the NWSTG (doc. #AA0130006), which is available at:
http://205.156.54.206/noaaport/html/refs.shtml.

1.1 BACKGROUND

Two IP-Routers will be required for the formatted GOES products that AWIPS will receive from the NESDIS GOES Ingest and NOAAPORT Interface (GINI). A third IP-Router will be required for backup. The non-NOAA satellite products and imagery will pass from NESDIS to Silver Spring Metro Center II (SMCC2) over the NOAA FOB4/WWB/SSMC Metropolitan Area Network (MAN) and then will pass through the NWS headquarters firewall system before passing into the NCF. All IP-Routers will interface to an Ethernet/802.3 connection as depicted in Figure 1 (A) for the GINI LAN or Figure 1 (B) for the LAN associated with non-NOAA satellite data. Reference Exhibit E, Special Sensor Microwave Imager, Exhibit F, Geostationary Meteorological Satellite (Japan) and Exhibit G, Geostationary Meteorological Satellite (European), for the appropriate non-NOAA satellite data format.

The point-to-multipoint data required to support the Initial Operational Capability (IOC) is identified in Appendix K of the AWIPS System/Segment Specification (SSS).

2.0 REFERENCE DOCUMENTS

STANDARDS

INTERNATIONAL STANDARDS

a) International Standard ISO 8802-2 : 1989
[ANSI/IEEE Standard 802.2, : 1989]
(Revision of ANSI/IEEE Std. 802.2-1985)
Part 2: Logical Link Control

b) International Standard ISO/IEC 8802-3 : 1993
[ANSI/IEEE Standard 802.3, 1993 Edition]
Part 3: Carrier Sense Multiple Access with Collision Detection (CSMA/CD) Access Method and Physical Layer Specifications

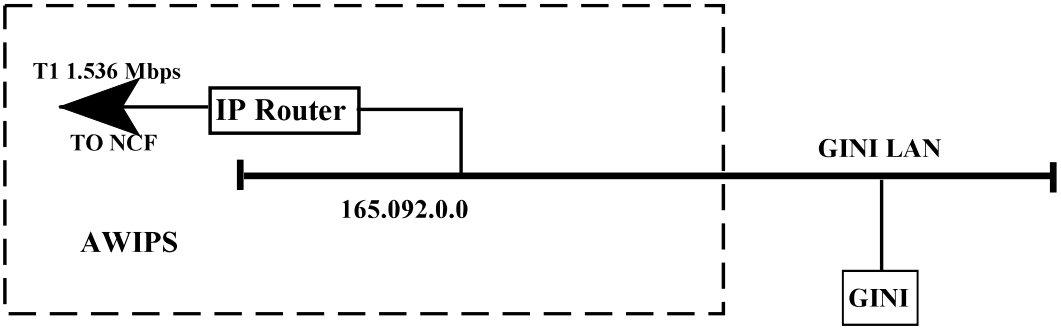
T1 1.536 Mbps
IP Router
TO NCF
GINI LAN
165.092.0.0
AWIPS
GINI

A

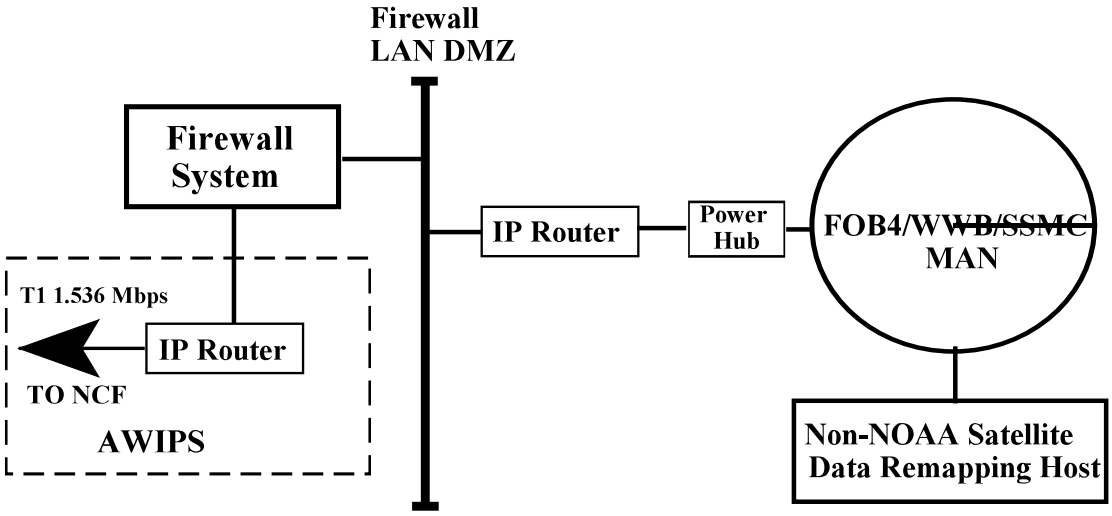
Firewall
LAN DMZ
Firewall
System
IP Router
Power
Hub
FOB4/WWB/SSMC
MAN
T1 1.536 Mbps
IP Router
TO NCF
AWIPS
Non-NOAA Satellite
Data Remapping Host

B

FIGURE 1

INDUSTRY STANDARDS

c) Digital Equipment Corp, Intel Corp, Xerox Corp (DIX). Ethernet Local Area Network Specification Version 2.0. November 1982

MILITARY STANDARDS (MIL-STD)

d) MIL-STD-1777 Internet Protocol (IP)
e) MIL-STD-1778 Transmission Control Protocol (TCP)
f) MIL-STD-1780 File Transfer Protocol (FTP)
g) MIL-STD-1782 TELNET Protocol

INTERNET REQUEST FOR COMMENTS (RFC) STANDARDS

	RFC No.	NAME	STATUS
h)	RFC 791	Internet Protocol	Required
i)	RFC 950	IP Subnet Extension	Required
j)	RFC 919	IP Broadcast Datagrams	Required
k)	RFC 922	IP Broadcast Datagrams with Subnets	Required
l)	RFC 792	Internet Control Message Protocol	Required
m)	RFC 826	Address Resolution Protocol	Elective
n)	RFC 894	Internet Protocol on Ethernets	Elective
o)	RFC 891	Internet Protocol on 802	Elective
p)	RFC 793	Transmission Control Protocol	Recommended
q)	RFC 854	TELNET Protocol Specification	Required
r)	RFC 855	TELNET Specification	Elective
s)	RFC 768	User Datagram Protocol	Recommended
t)	RFC 959	File Transfer Protocol	Required
u)	RFC 1122	Requirements for Internet Hosts Communication Layers	Required
v)	RFC 1123	Requirements for Internet Hosts Application and Support	Required

OTHER GOVERNMENT DOCUMENTS

AWIPS System/Segment Specification (SSS)

Source: AWIPS System Acquisition Office, SAO321
1315 East West Highway
Silver Spring, Maryland 20910

DOMSAT Message Format
Statement of Work for the Data Collection System Automatic Processing System (DAPS), Section C, Appendix E

Source: NESDIS
Federal Office Building #4
Suitland, Maryland

DPSS Interface Control Document

(Pages CCF-1 - CCF-12)
System Development Corporation
TM-(L)-5615/003/03A, June 1978

Source: NESDIS
Federal Office Building #4
Suitland, Maryland

METEOSAT High Resolution Image Dissemination
METEOSAT System Guide, Volume 9
R. Wolf - METEOSAT Exploitation Project
August 1984

Source: NESDIS
Federal Office Building #4
Suitland, Maryland

2.1 STANDARDS PRECEDENCE

There are variances in the Digital Equipment Corporation, Intel Corporation, Xerox Corporation (DIX) Ethernet standard, version 2.0, and the American National Standards Institute/Institute of Electrical and Electronics Engineers (ANSI/IEEE) LAN standards 802.2/802.3. These differences are relatively minor and are explained in Exhibit A to this document. Physical layer and data link layer protocols for the NESDIS interface are completely defined by the ANSI/IEEE 802.3 and ANSI/IEEE 802.2 Standards with the sole exception of the utilization of the length field in the ANSI/IEEE 802.3 frame. The utilization of this field is as specified in Reference Document c), the DIX Ethernet LAN specification, and is described in Exhibit A, rather than the length field specified in the ANSI/IEEE 802.3 standard. With this minor exception, the ANSI/IEEE 802.2 and ANSI/IEEE 802.3 Standards take precedence over the DIX Ethernet version 2.0 specification.

The Internet Community specifications for IP (RFC-791) and TCP (RFC-793) and the DoD MIL-STD specifications are intended to describe exactly the same protocols. The RFCs and the MIL-STDs for IP and TCP differ primarily in style and level of detail. For the purposes of the NESDIS interface specification, RFC-791 and RFC-793 as modified by RFC-1122 and RFC-1123 take precedence over the MIL-STDs for IP and TCP.

Likewise, the Internet Community specification for the File Transfer Protocol (FTP) (RFC-959, as modified by RFC-1123) and DoD MIL-STD specification describe exactly the same protocol. For the purposes of the NESDIS interface specification, RFC-959 and RFC-1123 take precedence of the MIL-STD for FTP.

3.0 INTERFACE CHARACTERISTICS

This section specifies the interface characteristic for the NESDIS interface.

3.1 PHYSICAL LAYER

The physical interface between the contractor provided router and the NESDIS will be a standard Local Area Network (LAN) interface as specified in the ANSI/IEEE Standard 802.3 with the following caveat: The 2 octet length field that is specified in paragraph 3.2.6 of the ANSI/IEEE 802.3 standard will be used as a type field for the NESDIS interface as specified in the DIX Ethernet standard, version 2.0. The DIX Ethernet version 2.0 framing as it compares to IEEE 802.3 framing is described in Exhibit A. The ANSI/IEEE 802.3 utilization of this field as a length field was never widely utilized on actual networks. This variance is allowed by Note 7 to paragraph 3.2.6 of the ANSI/IEEE 802.3 Standard as long as the value of this field exceeds 0x05EE (hex), which is the maximum IEEE 802.3 frame size. All values that will be used in the NESDIS interface for this field, as specified in the DIX Ethernet Version 2.0 standard, are as shown in Exhibit A, and are 0x0800 and larger.

3.1.1 BASEBAND MEDIUM

The baseband medium utilized for this interface will be coaxial cable of 50 ohm characteristic impedance, such as RG 58 A/U or RG 58 C/U, as specified in the ANSI/IEEE 802.3 Standard, paragraph 10.5. This baseband medium and the associated Medium Attachment Unit (MAU) are referred to as type 10BASE2 in the ANSI/IEEE 802.3 Standard. The connector that will be utilized will be a BNC type connector. The maximum length of any 50 ohm 10BASE2 coaxial cable segment between the NESDIS and the contractor provided router will be no longer than 185 meters. Up to five of these 10BASE2 segments may be interconnected with repeaters for a total distance of 925 meters. The minimum length of any 10BASE2 segment between the NESDIS and the contractor provided router will be 0.5 meters.

3.2 DATA LINK LAYER

The data link layer, which is composed of the Media Access Control (MAC) and Logical Link Control (LLC) sublayers for this interface, will be implemented as specified in the ANSI/IEEE 802.3 standard for the MAC sublayer and as specified in ANSI/IEEE 802.2 for the LLC sublayer.

3.2.1 MEDIA ACCESS CONTROL SUBLAYER

The Media Access Control (MAC) sublayer mechanism for this interface will be Carrier Sense Multiple Access with Collision Detection (CSMA/CD) as specified in sections 3.0 and 4.0 of the

ANSI/IEEE 802.3 standard. The "improved" IEEE 802.3 MAC mechanism, that listens for the carrier to return during the first part of inter-packet gap, as described in paragraph 6.0 of Exhibit A (and in the ANSI/IEEE 802.3 standard) will be implemented in the MAC sublayer for this interface. (The ANSI/IEEE 802.3 standard specifies the physical layer as well as the MAC sub-layer for this interface).

3.2.2 LLC SUBLAYER

The Logical Link Control (LLC) sublayer protocol for this interface will be implemented as specified in the ANSI/IEEE 802.2 standard.

3.3 NETWORK LAYER

The network layer for this interface will support the Internet Protocol (IP) as specified in RFC-791 and MIL-STD 1777 and as clarified in RFCs 950, 919, 922, and 1122. The Internet Control Message Protocol (ICMP) [RFC-792] and Address Resolution Protocol (ARP) [RFC 826] will also be implemented for this interface. A subnet mask of 255.255.255.128 will be utilized for the GINI interface. An "all ones" host portion of the IP destination address will be utilized for IP Broadcast Datagrams. IP addresses and subnets from the class B number "165.092.XXX.XXX" to support this interface will be assigned by the AWIPS contractor. However, the IP address and subnet mask for the non-NOAA satellite data will be assigned by NESDIS.

3.4 TRANSPORT LAYER

The transport layer for this interface will support the Transmission Control Protocol (TCP) as specified in RFC-793 and MIL-STD 1778 and as clarified in RFC-1122. The User Datagram Protocol (UDP), as specified in RFC-768 and clarified by RFC-1122 will also be utilized in the transport layer for this interface. The Transport Layer protocols are included as Exhibit B of the document.

3.5 SESSION LAYER

No session layer protocol is applicable for this interface.

3.6 PRESENTATION LAYER

No presentation layer protocol is applicable for this interface.

3.7 APPLICATION LAYER

The application layer protocols that will be supported for this interface are TELNET and File Transfer Protocol (FTP).

The TELNET protocol that will be utilized in the this interface is specified in RFC-854. The TELNET protocol utilizes the TCP Transport layer protocol as specified in paragraph 3.4 of this document. The TELNET standard (RFC-854) is included as Exhibit C of this document.

The FTP protocol that will be utilized in this interface is specified in MIL-STD 1780 and RFC-959 and is clarified in RFC-1123. The FTP protocol utilizes the TCP Transport layer protocol as specified in paragraph 3.4 of this document. The FTP standard (RFC-959) is included as Exhibit D of this document.

3.7.1 TELNET PROTOCOL

The original network environment that TELNET was designed for was an environment where host were connected to the network, and users accessed the network using backend terminals. All protocols were implemented in the hosts. The internetwork environment has evolved over the past years to include LANs connected by routers to each other and to the longhaul network. There are fewer backend dumb terminals; users have terminals connected to the LAN by an interface unit with the protocols necessary for communicating with local hosts, or they have workstations that can be looked at as a single user hosts running the full protocol suite or as terminal emulators with an in-board interface unit. This is sufficient to communicate locally; the terminal may access a virtual terminal protocol in the host for remote access. The workstations may also work this way or they may have the virtual terminal protocol as well, and thus, be able to access remote hosts directly.

The TELNET process in the user host is referred to as Client TELNET and the process in the remote host is referred to as Server TELNET. Most host processors will have both Client and Server TELNET running as applications on top of a Transmission Control Protocol (TCP). Client TELNET will support backend or LAN connected terminals and Server TELNET will support incoming requests for remote terminal support. The TELNET data transmission is done over a full-duplex network connection provided by the lower layer protocols. However, TELNET data is actually sent in half-duplex mode, that is, in one direction at a time. The TELNET RFC-854 can be found in Exhibit C of this document.

3.7.2 FILE TRANSFER PROTOCOL (FTP)

The Internet standards include a rather powerful file transfer protocol called File Transfer Protocol (FTP) and is a widely used upper layer standard. The purpose of FTP is to

define procedures for the transfer of files between two machines. FTP is rather unusual in that it maintains two logical connections between the machines. One connection is used for the login between machines and uses the TELNET protocol. The other connection is used for data transfer. This concept is shown in Figure 2. The end user communicates with a Protocol Interpreter (PI), which governs the control connection. The PI must transfer information between the user and the PI's file System. Commands and replies are transmitted between the user-PI and the server-PI. As depicted in the aforementioned figure, the other machine's (server's) PI responds to the TELNET protocol in managing connections. This TELNET connection is usually transparent to the user when it is made in conjunction with an FTP session. All TELNET parameters are usually negotiated via the Client and Server software managing the FTP session.

During the file transfer, data management is performed by the other logical connection, which is called the Data Transfer Process (DTP). Once the DTP has performed its functions and the user's request has been satisfied, the PI is used to close the connection.

FTP is somewhat limited in its capability to support different types of data representation and the negotiation of the use of these types between machines. The FTP user is allowed to specify a type that will be used in the transfer (for example, ASCII, EBCDIC, etc.). ASCII is the default type, and FTP requires that all implementations support ASCII code. EBCDIC is also supported and is used rather extensively in data transfer between mainframe host computers. Both ASCII and EBCDIC use a second parameter to indicate if the characters will be used for format control purposes. For example, the carriage control (CR), line feed (LF), vertical tab (VT), and form feed (FF) can be defined as control characters during the FTP session.

FTP also supports the transfer of bit streams, which it calls image types. With this operation, the data are sent in continuous bit streams. For the actual transfer, they are packed into 8-bit bytes. Most operations use this type for transmitting binary images, and therefore most FTP implementations support the image type. The File Transfer Protocol Specification RFC-959, can be found in Exhibit D of this document.

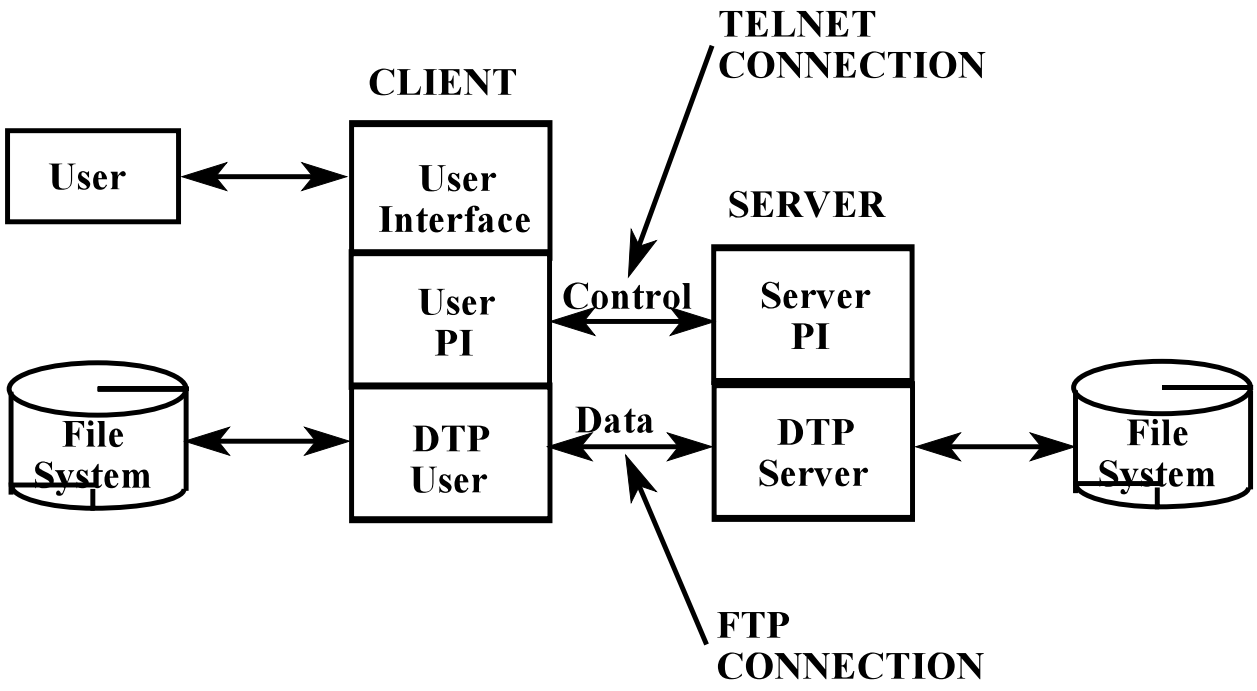

Protocol Interpreter (PI)
Data Transfer Process (DTP)

FIGURE 2

4.0 PRODUCT STRUCTURE

There are two major parts to each independent piece of data as it is transferred across the interface: (1) the product identification and (2) the product. The product identification is a block(s) of information necessary to route the product to an appropriate processor at the receiving site. This includes product attributes such as the location or area covered as well as a product identifier. These two parts are depicted below.

Product Identification	Product

FIGURE 3 Overview of Product Content

4.1 NESDIS INTERFACE PRODUCT IDENTIFICATION

For all NESDIS interface products the CCCC (originating station identifier) that follows the $T_1T_2A_1A_2ii$ will be "KNES" indicating that the product originated from the NESDIS interface in Camp Springs, Maryland. The first character of the WMO abbreviated heading for satellite products is always the letter T, i.e., T_1 = T for all satellite products. See Tables 4.0, 4.1, 4.2, and 4.3 for the other characters in the WMO abbreviated heading.

In the future, NESDIS may be making operational AWIPS satellite image sectors using exclusively METEOSAT digital data in the event of a GOES failure. WMO headers for such products have not yet been added to reflect this in Table 4.3.

Table 4.0 WMO Abbreviated Heading - T_2 for Satellite Products

Designator	Data Type
T_2 = A	Atmospheric Parameters
D	Data Bases
I	Images
O	Ocean Surface

Table 4.1 WMO Abbreviated Heading - A_1 for Satellite Products

Designator		Satellite
A_1 =	C	Composite
	D	DMSP
	E	ERS
	G	GOES
	J	JERS
	K	GMS
	M	Meteosat
	T	TIROS (POES/NPOESS)
	Q	Quikscat

Table 4.2 WMO Abbreviated Heading - A_2 for Satellite Products

Designator		Area/Subtype
A_2 =	A	Alaska Regional
	B	Alaska National
	C	Altimeter
	D	Tropical Discussion
	E	East CONUS
	F	Northern Hemisphere
	G	GAC
	H	Hawaii Regional
	I	Hawaii National
	J	Precipitation Estimates
	K	Scatterometer
	L	LAC
	M	Solar Env. Monitor (SEM)
	N	Super-National
	O	Ocean Color
	P	Puerto Rico Regional
	Q	Puerto Rico National
	R	HRPT
	S	Soundings
	T	Sea Surface Temperatures
	U	Winds
	V	SSM/I
	W	West CONUS
	X	WEFAX
	Y	ASOS Supplemental Cloud
	Z	Available

Table 4.3A WMO Abbreviated Heading - ii for Remapped GOES Satellite Products

When A_1 = G
then i_1i_2 is

01	- Imager Visible
02	- Imager 11 micron (IR)
03	- Imager 12 micron (IR)
04	- Imager 3.9 micron (IR)
05	- Imager 6.7/6.5 micron (IR) ("WV")
06	- Imager 13 micron (IR)
07	- Imager 1.3 micron (IR)
08-12	Reserved for future use
13	- Imager Based Derived Lifted Index (LI)
14	- Imager Based Derived Precipitable Water (PW)
15	- Imager Based Derived Surface Skin Temp (SFC Skin)
16	- Sounder Based Derived Lifted Index (LI)
17	- Sounder Based Derived Precipitable Water (PW)
18	- Sounder Based Derived Surface Skin Temp (SFC Skin)
19	- Derived Convective Available Potential Energy (CAPE)
20	- Derived land-sea temp
21	- Derived Wind Index (WINDEX)
22	- Derived Dry Microburst Potential Index (DMPI)
23	- Derived Microburst Day Potential Index (MDPI)
24	- Derived Convective Inhibition
25	- Derived Volcano Imagery
26	- Reserved for future use
27	- Gridded Cloud Top Height
28	- Gridded Cloud Amount
29	- Rain fall rate - Manual
30	- Rain fall rate - Automated
31	- Surface wetness
32	- Ice concentrations
33	- Ice type
34	- Ice edge
35	- Cloud water content
36	- Surface type
37	- Snow indicator
38	- Snow/water content
39	- Derived volcano imagery
40	- Reserved for future use

41 - Sounder 14.71 micron imagery
42 - Sounder 14.37 micron imagery
43 - Sounder 14.06 micron imagery
44 - Sounder 13.64 micron imagery
45 - Sounder 13.37 micron imagery
46 - Sounder 12.66 micron imagery
47 - Sounder 12.02 micron imagery
48 - Sounder 11.03 micron imagery
49 - Sounder 9.71 micron imagery
50 - Sounder 7.43 micron imagery
51 - Sounder 7.02 micron imagery
52 - Sounder 6.51 micron imagery
53 - Sounder 4.57 micron imagery
54 - Sounder 4.52 micron imagery
55 - Sounder 4.45 micron imagery
56 - Sounder 4.13 micron imagery
57 - Sounder 3.98 micron imagery
58 - Sounder 3.74 micron imagery
59 - Sounder Visible imagery
60-99 Reserved for future use

Table 4.3B WMO Abbreviated Heading - ii for Non-GOES Satellite Products (and Meteosat/GOES E/GOES W/GMS composite)

When $A_1 \neq G$
then $i_1 i_2$ is

01 - Imager Visible
02 - Imager 3.9 micron (IR)
03 - Imager 6.7/6.5 micron (WV)
04 - Imager 11 micron (IR)
05 - Imager 12 micron (IR)
06 - Imager 13 micron (IR)
07 - Imager 1.3 micron (IR)
08-12 Reserved for future use
13 - Imager Based Derived Lifted Index (LI)
14 - Imager Based Derived Precipitable Water (PW)
15 - Imager Based Derived Surface Skin Temp (SFC Skin)
16 - Sounder Based Derived Lifted Index (LI)
17 - Sounder Based Derived Precipitable Water (PW)
18 - Sounder Based Derived Surface Skin Temp (SFC Skin)
19-25 Reserved for future use
26 - Scatterometer Data
27 - Gridded Cloud Top Pressure or Height
28 - Gridded Cloud Amount

29 - Rain fall rate
30 - Surface winds speeds over oceans and Great Lakes
31 - Surface wetness
32 - Ice concentrations
33 - Ice type
34 - Ice edge
35 - Cloud water content
36 - Surface type
37 - Snow indicator
38 - Snow/water content
39 - Derived volcano imagery
40-99 Reserved for future use

4.2 REMAPPED GOES SATELLITE PRODUCT FORMAT SPECIFICATION

The following describes the format for Remapped GOES Satellite Products.

The Remapped GOES Satellite product suite consists of several distinct products. Within the suite, products can be divided into visible (VIS), infrared (IR), water vapor (WV), and derived (DR) product categories.

All products in the remapped GOES product suite are structured as shown in Figure 4.

Header (PDB)	Record 1	Record 2	...	Record N	End of File

Header = Product Definition Block (PDB)
Record = One Scan Line of Image
End of File = End of File Block

Figure 4 Remapped GOES Product Structure

The following sections define this structure in more detail.

4.3 HEADER DEFINITION

Product attributes for all products in the remapped GOES product suite are conveyed via a Product Definition Block (PDB) (header) which is defined in Table 4.4A for the Lambert Conformal and Polar Stereographic Map Projections and in Table 4.4B for the Mercator map projection.

Table 4.4A Product Definition Block (PDB) (Header) - Lambert Conformal and Polar Stereographic Projection.

OCTET	SCALING	CONTENTS
1	Integer	Source - 1 = NESDIS
2	Integer	Creating Entity - See Table 4.5
3	Integer	Sector ID - See Table 4.6
4	Integer	Physical Element/Channel ID - See Table 4.7
5-6	Long (2 byte) Integer	Number of Logical Records in Product See Tables 4.9, 4.11, 4.12, 4.13, 4.14, 4.16
7-8	Long (2 byte) Integer	Size of Logical Record in bytes for Product See Tables 4.9, 4.11, 4.12, 4.13, 4.14, 4.16
9-15	Integer	Valid Time
9		Year of Century (Since 1900, e.g., 102 corresponds to 2002.)
10		Month of Year
11		Day of Month
12		Hour of Day
13		Minute of Hour
14		Second of Minute
15		Hundredths of Second
16	Integer	Map Projection Indicator; 3 = Lambert Conformal Projection Grid 5 = Polar Stereographic Projection Grid 51-254 = (reserved)
17-18	Integer	Nx - Number of points along x-axis
19-20	Integer	Ny - Number of points along y-axis
21-23	Integer x 10000	La1 - Latitude of first gridpoint
24-26	Integer x 10000	Lo1 - Longitude of first gridpoint
27		Set to 0 (reserved)
28-30	Integer x 10000	Lov - The orientation of the grid; i.e., the east longitude value of the meridian which is parallel to the y-axis (or columns of the grid) along which latitude increases as the y-coordinate increases. (Note: the orientation longitude may or may not appear within a particular grid.)
31-33	3-Byte Integer	Dx - the X-direction increment (See note 2)
34-36	3-Byte Integer	Dy - the Y-direction increment (See note 2)
37	Bit 1 Flag	Projection center flag (See note 5)
38	Bit Flags	Scanning mode (See note 6)
39-41	Integer x 10000	Latin - The latitude at which the Lambert projection cone is tangent to the earth; for Polar Stereographic set to 0
42	Integer	Image Resolution - See Table 4.9, 4.11, 4.12, 4.13, 4.14, 4.16
43	Not used in GMAP3	Data Compression Indicator 1 = compressed 0 = no compression
44	Integer	Version Number for PDB for Creating Entity in Octet 2. (initial version = 1)
45-46	Integer	Number of octets in the PDB
47 (See note 7)	Integer	Navigational/Calibration Indicator 0 = Nav./Cal. Information not included 1 = Nav. and Cal. Information included 2 = Nav. Information only included 3 = Cal. Information only included
48-512 (See note 8)		Blanks, unless Nav. or Cal. included

NOTES - Table 4.4A

1. Latitude and longitude are in 10^{-4} degrees (ten-thousandths).

2. Increments are in units of tenths of meters, at the tangent latitude (60 degree latitude for Polar Stereographic) circle nearest to the pole in the projection plane.

3. Latitude values are limited to the range 0 - 900,000. Bit 1 is set to 1 to indicate south latitude.

4. Longitude values are limited to the range 0 - 3,600,000. Bit one is set to 1 to indicate west longitude.

5. Octet 37:
   Bit 1 set to 0 if the North Pole is on the projection plane.
   Bit 1 set to 1 if the South Pole is on the projection plane.

6. Octet 38, the Scanning mode or direction:
   Bit 1 - Set to 0 to indicate left to right.
   Bit 2 - Set to 0 to indicate top to bottom.
   Bit 3 - Set to 0 to indicate the points scan first along the x-axis and then along the y-axis (FORTRAN: (I,J)).
   Setting the bit(s) to 1 indicates the reverse scanning mode.

7. Octet 47, Navigation/Calibration Indicator
   Set to 0 to indicate no nav./cal. information included (PDB = 512 octets, octets 48-512 are blanks)
   Set to 1 to indicate nav. and cal. information included
   Set to 2 to indicate nav. information only included
   Set to 3 to indicate cal. information only included
   (For values 1-3, PDB size will likely increase to no more than 2048 octets). Additional ICD tables will be generated defining nav./cal. octets for each of the creating entities (satellite/imagery types) for which nav./cal. is to be included.

8. All fields will appear with high order bit first over the communications medium.

Table 4.4B Product Definition Block (PDB) (header) - Mercator Projection

OCTET	SCALING	CONTENTS
1	Integer	Source - 1 = NESDIS
2	Integer	Creating Entity - See Table 4.5
3	Integer	Sector ID - See Table 4.6
4	Integer	Physical Element/Channel ID - See Table 4.7
5-6	Long (2 byte) Integer	Number of Logical Records in Product See Tables 4.10, 4.15
7-8	Long (2 byte) Integer	Size of Logical Record in bytes for Product See Tables 4.10, 4.15
9-15	Integer	Valid Time
9		Year of Century (Since 1900, e.g., 102 corresponds to 2002.)
10		Month of Year
11		Day of Month
12		Hour of Day
13		Minute of Hour
14		Second of Minute
15		Hundredths of Second
16	Integer	Map Projection Indicator; 1 = Mercator Projection Grid 51-254 = (reserved)
17-18	Integer	Nx - Number of points along x-axis
19-20	Integer	Ny - Number of points along y-axis
21-23	Integer x 10000	La1 - Latitude of first gridpoint
24-26	Integer x 10000	Lo1 - Longitude of first gridpoint
27	Bit 1 Flag	Resolution Flag Bits Value Meaning 1 0 Direction increments not given 1 Direction increments given 2-8 0 (reserved)
28-30	Integer x 10000	La2 - latitude of last grid point
31-33	Integer x 10000	Lo2 - longitude of last grid point
34-35	Integer	Di - the longitudinal direction increment (See note 2)
36-37	Integer	Dj - the latitudinal direction increment (See note 2)
38	Bit Flags	Scanning mode (see note 6)
39-41	Integer x 10000	Latin - The latitude(s) at which the Mercator projection cylinder intersects the earth.
42	Integer	Image Resolution - See Tables 4.10, 4.15
43	Not used in GMAP3	Data Compression Indicator 1 = compressed 0 = no compression
44	Integer	Version Number for PDB for Creating Entity in Octet 2. (initial version = 1)
45-46	Integer	Number of octets in the PDB
47 (See note 7)	Integer	Navigational/Calibration Indicator 0 = Nav./Cal. Information not included 1 = Nav. and Cal. Information included 2 = Nav. Information only included 3 = Cal. Information only included
48-512 (See note 8)		Blanks, unless Nav. or Cal. included

NOTES - Table 4.4B

1. Latitude and longitude are in 10^{-4} degrees (ten-thousandths).

2. Set to 0.

3. Latitude values are limited to the range 0 - 900,000. Bit 1 is set to 1 to indicate south latitude.

4. Longitude values are limited to the range 0 - 3,600,000. Bit one is set to 1 to indicate west longitude.

5. The latitude and longitude of the last gridpoint should always be given.

6. Octet 38, the Scanning mode or direction:

BIT	VALUE	MEANING
1	0	Points along a latitude scan from west to east
1	1	Points along a latitude scan from east to west.
2	0	Points along a meridian scan from north to south.
2	1	Points along a meridian scan from south to north.
3	0	Points scan first along circles of latitude, then along meridians (FORTRAN: (I,J))
3	1	Points scan first along meridians, then along circles of latitude (FORTRAN: (J,I))

7. Octet 47, Navigation/Calibration Indicator
   Set to 0 to indicate no nav./cal. information included
   (PDB = 512 octets, octets 48-512 are blanks)
   Set to 1 to indicate nav. and cal. information included
   Set to 2 to indicate nav. information only included
   Set to 3 to indicate cal. information only included
   (For values 1-3, PDB size will likely increase to no more than 2048 octets). Additional ICD tables will be generated defining nav./cal. octets for each of the creating entities (satellite/imagery types) for which nav./cal. is to be included.

8. All Fields will appear with high order bit first over the communications medium.

Table 4.5 Creating Entity (PDB byte 2)

6 = Composite
7 = DMSP
8 = GMS
9 = METEOSAT
10 = GOES-7(H) Reserved for future use.
11 = GOES-8(I)
12 = GOES-9(J)
13 = GOES-10(K)
14 = GOES-11(L)
15 = GOES-12(M)
16 = GOES-13(N?)

Table 4.6 Sector ID (PDB byte 3)

0 = Northern Hemisphere Composite
1 = East CONUS
2 = West CONUS
3 = Alaska Regional
4 = Alaska National
5 = Hawaii Regional
6 = Hawaii National
7 = Puerto Rico Regional
8 = Puerto Rico National
9 = Supernational
10 = NH Composite - Meteosat/GOES E/ GOES W/GMS

Table 4.7 Physical Element (PDB byte 4) for Remapped GOES Satellite Products, Non-GOES Satellite Products, and Meteosat/GOES E/GOES W/GMS composite

01 = Imager Visible
02 = Imager 3.9 micron IR
03 = Imager 6.7/6.5 micron IR ("WV")
04 = Imager 11 micron IR
05 = Imager 12 micron IR
06 = Imager 13 micron (IR)
07 = Imager 1.3 micron (IR)

08-12 = Reserved for future use
13 = Imager Based Derived Lifted Index (LI)
14 = Imager Based Derived Precipitable Water (PW)
15 = Imager Based Derived Surface Skin Temp (SFC Skin)
16 = Sounder Based Derived Lifted Index (LI)
17 = Sounder Based Derived Precipitable Water (PW)
18 = Sounder Based Derived Surface Skin Temp (SFC Skin)
19 = Derived Convective Available Potential Energy (CAPE)
20 = Derived land-sea temp
21 = Derived Wind Index(WINDEX)
22 = Derived Dry Microburst Potential Index (DMPI)
23 = Derived Microburst Day Potential Index (MDPI)
24 = Derived Convective Inhibition
25 = Derived Volcano Imagery
26 = Scatterometer Data
27 = Gridded Cloud Top Pressure or Height
28 = Gridded Cloud Amount
29 = Rain fall rate
30 = Surface wind speeds over oceans and Great Lakes
31 = Surface wetness
32 = Ice concentrations
33 = Ice type
34 = Ice edge
35 = Cloud water content
36 = Surface type
37 = Snow indicator
38 = Snow/water content
39 = Derived volcano imagery
40 = Reserved for future use
41 = Sounder 14.71 micron imagery
42 = Sounder 14.37 micron imagery
43 = Sounder 14.06 micron imagery
44 = Sounder 13.64 micron imagery
45 = Sounder 13.37 micron imagery
46 = Sounder 12.66 micron imagery
47 = Sounder 12.02 micron imagery
48 = Sounder 11.03 micron imagery
49 = Sounder 9.71 micron imagery

50 = Sounder 7.43 micron imagery
51 = Sounder 7.02 micron imagery
52 = Sounder 6.51 micron imagery
53 = Sounder 4.57 micron imagery
54 = Sounder 4.52 micron imagery
55 = Sounder 4.45 micron imagery
56 = Sounder 4.13 micron imagery
57 = Sounder 3.98 micron imagery
58 = Sounder 3.74 micron imagery
59 = Sounder Visible imagery
60-99 = Reserved for future products

Table 4.8A Latitude/Longitude Dimensions of Remapped GOES/Composite Products (GOES 8-11)

Map Description	**Coverage - Outside Corner Edges**	**Product Specific Definitions**	
		WMO Header	**Product Res, Wavelength (microns), Lines x Pixels**
Eastern CONUS Lambert Satellite: GOES East Projection: Lambert Conformal Tangent Latitude: 25.000N Reference Longitude: 95.000W Reference Grid: AWIPS Grid 211* * The Dx, Dy grid increment (at 25 deg north) was selected so that the grid spacing would be exactly 80.000 km at 35 deg north	Lower Left: 16.369N 113.133W Lower Right: 14.335N 65.091W Upper Right: 57.289N 49.385W Upper Left: 59.844N 123.044W	TIGE01	1.0159Km @ 25.000N Visible 5120x5120
		TIGE02, 03, 04	4.0635Km @ 25.000N IR (11, 12, 3.9) 1280x1280
		TIGE05	8.1271Km @ 25.000N WV (6.7) 640x640
Western CONUS Lambert Satellite: GOES West Projection: Lambert Conformal Tangent Latitude: 25.000N Reference Longitude: 95.000W Reference Grid: AWIPS Grid 211* * The Dx, Dy grid increment (at 25 deg north) was selected so that the grid spacing would be exactly 80.000 km at 35 deg north	Lower Left: 12.190N 133.459W Lower Right: 17.514N 92.720W Upper Right: 61.257N 91.444W Upper Left: 54.536N 152.855W	TIGW01	1.0159Km @ 25.000N Visible 5120x4400
		TIGW02, 03, 04	4.0635Km @ 25.000N IR (11, 12, 3.9) 1280x1100
		TIGW05	8.1271Km @ 25.000N WV (6.7) 640x550
Hawaii Regional Mercator Satellite: GOES West Projection: Mercator Reference Grid: AWIPS Grid 208	Lower Left: 9.343N 167.315W Lower Right: 9.343N 145.878W Upper Right: 28.092N 145.878W Upper Left: 28.092N 167.315W	TIGH01	1.0000Km @ 20.000N Visible 2080x2240
		TIGH02, 03, 04	4.0000Km @ 20.000N IR (11, 12, 3.9) 520x560
		TIGH05	8.0000Km @ 20.000N WV (6.7) 260x280

Map Description	Coverage - Outside Corner Edges	Product Specific Definitions	
		WMO Header	**Product Res, Wavelength (microns), Lines x Pixels**
Puerto Rico Regional Mercator Satellite: GOES East Projection: Mercator Reference Grid: AWIPS Grid 210	Lower Left: 9.000N 77.000W Lower Right: 9.000N 58.625W Upper Right: 26.422N 58.625W Upper Left: 26.422N 77.000W	TIGP01	1.0000Km @ 20.000N Visible 1920x1920
		TIGP02, 03, 04	4.0000Km @ 20.000N IR (11, 12, 3.9) 480x480
		TIGP05	8.0000Km @ 20.000N WV (6.7) 240x240
Alaska Regional Polar Stereo Satellite: GOES West Projection: Polar Stereo Reference Longitude: 150.000W Reference Grid: AWIPS Grid 207	Lower Left: 42.085N 175.641W Lower Right: 42.085N 124.359W Upper Right: 63.975N 93.690W Upper Left: 63.975N 153.690E	TIGA01	1.9844Km @ 60.000N Visible 1632x2304
		TIGA02, 03, 04	7.9375Km @ 60.000N IR (11, 12, 3.9) 408x576
		TIGA05	15.8750Km @ 60.000N WV (6.7) 204x288
Northern Hemisphere Composite Satellites: GOES East and West Projection: Polar Stereo Reference Longitude: 105.000W Note: The 12um and 3.9um N.H. Composites (i.e., TIGF03 and TIGF04, respectively) will be discontinued from the GOES East and West feed around the time of GOES-12 activation.	Lower Left: 21.245S 150.000W Lower Right: 21.245S 60.000W Upper Right: 1.892S 15.000W Upper Left: 1.892S 165.000E	TIGF01	24.0000Km @ 60.000N Visible 512x1024
		TIGF02, 03, 04	24.0000Km @ 60.000N IR (11, 12, 3.9) 512x1024 (see note, to left)
		TIGF05	24.0000Km @ 60.000N WV (6.7) 512x1024

Map Description	Coverage - Outside Corner Edges	Product Specific Definitions	
		WMO Header	**Product Res, Wavelength (microns), Lines x Pixels**
Super National Composite Satellites: GOES East and West Projection: Polar Stereo Reference Longitude: 105.000W Reference Grid: AWIPS Grid 202 Note: The 12um and 3.9um Super National Composites (i.e., TIGN03 and TIGN04, respectively) will be discontinued from the GOES East and West feed around the time of GOES-12 activation.	Lower Left: 7.838N 141.027W Lower Right: 7.838N 68.973W Upper Right: 35.616N 18.576W Upper Left: 35.616N 168.576E	TIGN01	7.9375Km @ 60.000N Visible 1008x1536
		TIGN02, 03, 04	7.9375Km @ 60.000N IR (11, 12, 3.9) 1008x1536 (see note, to left)
		TIGN05	7.9375Km @ 60.000N WV (6.7) 1008x1536
Alaska National Polar Stereo Satellite: GOES West Projection: Polar Stereo Reference Longitude: 150.000W Reference Grid: AWIPS Grid 203	Lower Left: 19.132N 174.162E Lower Right: 24.362N 123.435W Upper Right: 57.635N 53.660W Upper Left: 44.646N 115.601E	TIGB01	8.2826Km @ 60.000N Visible 874x1012
		TIGB02	8.2826Km @ 60.000N IR (11) 874x1012
		TIGB05	8.2826Km @ 60.000N WV (6.7) 874x1012
Hawaii National Mercator Satellite: GOES West Projection: Mercator Reference Grid: AWIPS Grid 204	Lower Left: 25.000S 110.000E Lower Right: 25.000S 109.129W Upper Right: 60.644N 109.129W Upper Left: 60.644N 110.000E	TIGI01	14.5455Km @ 20.000N Visible 737x1012
		TIGI02	14.5455Km @ 20.000N IR (11) 737x1012
		TIGI05	14.5455Km @ 20.000N WV (6.7) 737x1012

Map Description	Coverage - Outside Corner Edges	Product Specific Definitions	
		WMO Header	Product Res, Wavelength (microns), Lines x Pixels
Puerto Rico National Polar Stereo Satellite: GOES East Projection: Polar Stereo Reference Longitude: 60.000W Reference Grid: AWIPS Grid 205	Lower Left: 0.616N 84.905W Lower Right: 3.389N 42.181W Upper Right: 45.620N 15.000W Upper Left: 36.257N 115.305W	TIGQ01	8.2826Km @ 60.000N Visible 874x1012
		TIGQ02	8.2826Km @ 60.000N IR (11) 874x1012
		TIGQ05	8.2826Km @ 60.000N WV (6.7) 874x1012
Multi-Satellite Composite Satellites: METEOSAT, GOES East, GOES West, GMS Projection: Polar Stereo Reference Longitude: 105.000W Reference Grid: AWIPS Grid 201	Lower Left: 20.826S 150.000W Lower Right: 20.826S 60.000W Upper Right: 20.826S 30.000E Upper Left: 20.826S 120.000E	TICF01	23.8125Km @ 60.000N Visible 1024x1024
		TICF04	23.8125Km @ 60.000N IR (11) 1024x1024
		TICF03	23.8125Km @ 60.000N WV (6.7) 1024x1024

Table 4.8B Latitude/Longitude Dimensions of Remapped GOES/Composite Products (GOES 12 and N)

Map Description	Coverage - Outside Corner Edges	Product Specific Definitions	
		WMO Header	Product Res, Wavelength (microns), Lines x Pixels
Eastern CONUS Lambert Satellite: GOES East Projection: Lambert Conformal Tangent Latitude: 25.000N Reference Longitude: 95.000W Reference Grid: AWIPS Grid 211* * The Dx, Dy grid increment (at 25 deg north) was selected so that the grid spacing would be exactly 80.000 km at 35 deg north	Lower Left: 16.369N 113.133W Lower Right: 14.335N 65.091W Upper Right: 57.289N 49.385W Upper Left: 59.844N 123.044W	TIGE01	1.0159Km @ 25.000N Visible 5120x5120
		TIGE02, 04, 05	4.0635Km @ 25.000N IR (11, 3.9, 6.5(wv)) 1280x1280
		TIGE06	8.1271Km @ 25.000N IR (13) 640x640
Western CONUS Lambert Satellite: GOES West Projection: Lambert Conformal Tangent Latitude: 25.000N Reference Longitude: 95.000W Reference Grid: AWIPS Grid 211* * The Dx, Dy grid increment (at 25 deg north) was selected so that the grid spacing would be exactly 80.000 km at 35 deg north	Lower Left: 12.190N 133.459W Lower Right: 17.514N 92.720W Upper Right: 61.257N 91.444W Upper Left: 54.536N 152.855W	TIGW01	1.0159Km @ 25.000N Visible 5120x4400
		TIGW02, 04, 05	4.0635Km @ 25.000N IR (11, 3.9, 6.5(wv)) 1280x1100
		TIGW06	8.1271Km @ 25.000N IR (13) 640x550
Hawaii Regional Mercator Satellite: GOES West Projection: Mercator Reference Grid: AWIPS Grid 208	Lower Left: 9.343N 167.315W Lower Right: 9.343N 145.878W Upper Right: 28.092N 145.878W Upper Left: 28.092N 167.315W	TIGH01	1.0000Km @ 20.000N Visible 2080x2240
		TIGH02, 04, 05	4.0000Km @ 20.000N IR (11, 3.9, 6.5(wv)) 520x560
		TIGH06	8.0000Km @ 20.000N IR (13) 260x280

Map Description	Coverage - Outside Corner Edges	Product Specific Definitions	
		WMO Header	**Product Res, Wavelength (microns), Lines x Pixels**
Puerto Rico Regional Mercator Satellite: GOES East Projection: Mercator Reference Grid: AWIPS Grid 210	Lower Left: 9.000N 77.000W Lower Right: 9.000N 58.625W Upper Right: 26.422N 58.625W Upper Left: 26.422N 77.000W	TIGP01	1.0000Km @ 20.000N Visible 1920x1920
		TIGP02, 04, 05	4.0000Km @ 20.000N IR (11, 3.9, 6.5(wv)) 480x480
		TIGP06	8.0000Km @ 20.000N IR (13) 240x240
Alaska Regional Polar Stereo Satellite: GOES West Projection: Polar Stereo Reference Longitude: 150.000W Reference Grid: AWIPS Grid 207	Lower Left: 42.085N 175.641W Lower Right: 42.085N 124.359W Upper Right: 63.975N 93.690W Upper Left: 63.975N 153.690E	TIGA01	1.9844Km @ 60.000N Visible 1632x2304
		TIGA02, 04, 05	7.9375Km @ 60.000N IR (11, 3.9, 6.5 (wv)) 408x576
		TIGA06	15.8750Km @ 60.000N IR (13) 204x288
Northern Hemisphere Composite Satellites: GOES East and West Projection: Polar Stereo Reference Longitude: 105.000W	Lower Left: 21.245S 150.000W Lower Right: 21.245S 60.000W Upper Right: 1.892S 15.000W Upper Left: 1.892S 165.000E	TIGF01, 02, 05	24.0000Km @ 60.000N Visible, IR (11, 6.5(wv)) 512x1024

Map Description	Coverage - Outside Corner Edges	Product Specific Definitions	
		WMO Header	Product Res, Wavelength (microns), Lines x Pixels
Super National Composite Satellites: GOES East and West Projection: Polar Stereo Reference Longitude: 105.000W Reference Grid: AWIPS Grid 202	Lower Left: 7.838N 141.027W Lower Right: 7.838N 68.973W Upper Right: 35.616N 18.576W Upper Left: 35.616N 168.576E	TIGN01, 02,05	7.9375Km @ 60.000N Visible, IR(11) and IR/wv(6.5) 1008x1536
Alaska National Polar Stereo Satellite: GOES West Projection: Polar Stereo Reference Longitude: 150.000W Reference Grid: AWIPS Grid 203	Lower Left: 19.132N 174.162E Lower Right: 24.362N 123.435W Upper Right: 57.635N 53.660W Upper Left: 44.646N 115.601E	TIGB01, 02, 05	8.2826Km @ 60.000N Visible, IR(11) and IR/wv(6.5) 874x1012
Hawaii National Mercator Satellite: GOES West Projection: Mercator Reference Grid: AWIPS Grid 204	Lower Left: 25.000S 110.000E Lower Right: 25.000S 109.129W Upper Right: 60.644N 109.129W Upper Left: 60.644N 110.000E	TIGI01, 02, 05	14.5455Km @ 20.000N Visible, IR(11) and IR/wv(6.5) 737x1012
Puerto Rico National Polar Stereo Satellite: GOES East Projection: Polar Stereo Reference Longitude: 60.000W Reference Grid: AWIPS Grid 205	Lower Left: 0.616N 84.905W Lower Right: 3.389N 42.181W Upper Right: 45.620N 15.000W Upper Left: 36.257N 115.305W	TIGQ01, 02, 05	8.2826Km @ 60.000N Visible, IR(11) and IR/wv(6.5) 874x1012

Map Description	Coverage - Outside Corner Edges	Product Specific Definitions	
		WMO Header	Product Res, Wavelength (microns), Lines x Pixels
Multi-Satellite Composite Satellites: METEOSAT, GOES East, GOES West, GMS Projection: Polar Stereo Reference Longitude: 105.000W Reference Grid: AWIPS Grid 201	Lower Left: 20.826S 150.000W Lower Right: 20.826S 60.000W Upper Right: 20.826S 30.000E Upper Left: 20.826S 120.000E	TICF01	23.8125Km @ 60.000N Visible 1024x1024
		TICF04	23.8125Km @ 60.000N IR (11) 1024x1024
		TICF03	23.8125Km @ 60.000N WV (6.5/6.7) 1024x1024

Notes: 1. These outside corner points are rounded. The exact corner points are found in the referenced GRIB specification.

2. Table 4.8 summarizes the approximate latitudinal and longitudinal extent (see product definition block-grid dimensions) for each remapped product. The exact coverage will be included in the product definition block for each product as it is transmitted. The information is included here as examples. Sufficient information will be transmitted with each image product for its interpretation as to size, location, orientation, and pixel resolution. The AWIPS processing software shall be flexible so that these attributes of the data need not be held fixed for a particular Map Description.

Tables 4.9 - 4.16 which follow summarize the entries for the resolution, approximate number of records (blocks) per remapped product, and size of record (pixels per record) fields for each remapped product as specified in the product definition block. Again this information will be included in the product definition block for each product as it is transmitted. It is included here to show the approximate set of values for each product. Note that Bytes/Map does not include either the size of the header block or the size of the end of product block.

Table 4.9A Size and Format Specifications of East CONUS Lambert Maps (Tangent latitude 25 N, earth radius 6371.2 km, resolution at 25 N)

GOES 8-11:

PRODUCT DESCRIPTION	RES. IN KMS	# RECORDS/ IMAGE	BYTES/ RECORD	BYTES/ MAP
CHANNEL 1(VIS)	1.0159	5120	5120	26,214,400
CHANNELS 2(3.9u), 4(11u) & 5(12u)	4.0635	1280	1280	1,638,400
CHANNEL 3(6.7u,WV)	8.1271	640	640	409,600

GOES 12 & N:

PRODUCT DESCRIPTION	RES. IN KMS	# RECORDS/ IMAGE	BYTES/ RECORD	BYTES/ MAP
CHANNEL 1(VIS)	1.0159	5120	5120	26,214,400
CHANNELS 2(3.9u), 3(6.5u) & 4(11u)	4.0635	1280	1280	1,638,400
CHANNEL 6(13u)	8.1271	640	640	409,600

Table 4.9B Size and Format Specifications of West CONUS Lambert Maps (Tangent latitude 25 N, earth radius 6371.2 km, resolution at 25 N)
GOES 8-11:

PRODUCT DESCRIPTION	RES. IN KMS	# RECORDS/ IMAGE	BYTES/ RECORD	BYTES/ MAP
CHANNEL 1(VIS)	1.0159	5120	4400	22,528,000
CHANNELS 2(3.9u), 4(11u) & 5(12u)	4.0635	1280	1100	1,408,000
CHANNEL 3(6.7u,WV)	8.1271	640	550	352,000

GOES 12 & N:

PRODUCT DESCRIPTION	RES. IN KMS	# RECORDS/ IMAGE	BYTES/ RECORD	BYTES/ MAP
CHANNEL 1(VIS)	1.0159	5120	4400	22,528,000
CHANNELS 2(3.9u), 3(6.5u) & 4(11u)	4.0635	1280	1100	1,408,000
CHANNEL 6(13u)	8.1271	640	550	352,000

Table 4.10A Size and Format Specifications of Puerto Rico Mercator Maps (earth radius 6371.2 km, resolution at 20 N)
GOES 8-11:

PRODUCT DESCRIPTION	RES. IN KMS	# RECORDS/ IMAGE	BYTES/ RECORD	BYTES/ MAP
CHANNEL 1(VIS)	1.0000	1920	1920	3,686,400
CHANNELS 2(3.9u), 4(11u) & 5(12u)	4.0000	480	480	230,400
CHANNEL 3(6.7u,WV)	8.0000	240	240	57,600

GOES 12 & N:

PRODUCT DESCRIPTION	RES. IN KMS	# RECORDS/ IMAGE	BYTES/ RECORD	BYTES/ MAP
CHANNEL 1(VIS)	1.0000	1920	1920	3,686,400
CHANNELS 2(3.9u), 3(6.5u) & 4(11u)	4.0000	480	480	230,400
CHANNEL 6(13u)	8.0000	240	240	57,600

Table 4.10B Size and Format Specifications of Hawaii Mercator Maps (earth radius 6371.2 km, resolution at 20 N)
GOES 8-11:

PRODUCT DESCRIPTION	RES. IN KMS	# RECORDS/ IMAGE	BYTES/ RECORD	BYTES/ MAP
CHANNEL 1(VIS)	1.0000	2080	2240	4,659,200
CHANNELS 2(3.9u), 4(11u) & 5(12u)	4.0000	520	560	291,200
CHANNEL 3(6.7u,WV)	8.0000	260	280	72,800

GOES 12 & N:

PRODUCT DESCRIPTION	RES. IN KMS	# RECORDS/ IMAGE	BYTES/ RECORD	BYTES/ MAP
CHANNEL 1(VIS)	1.0000	2080	2240	4,659,200
CHANNELS 2(3.9u), 3(6.5u) & 4(11u)	4.0000	520	560	291,200
CHANNEL 6(13u)	8.0000	260	280	72,800

Table 4.11 Size and Format Specifications of Alaska PSG Maps (earth radius 6371.2 km, resolution at 60 N)
GOES 8-11:

PRODUCT DESCRIPTION	RES. IN KMS	# RECORDS/ IMAGE	BYTES/ RECORD	BYTES/ MAP

CHANNEL 1(VIS)	1.9844	1632	2304	3,760,128
CHANNELS 2(3.9u), 4(11u) & 5(12u)	7.9375	408	576	235,008
CHANNEL 3(6.7u,WV)	15.8750	204	288	58,752

GOES 12 & N:

PRODUCT DESCRIPTION	RES. IN KMS	# RECORDS/ IMAGE	BYTES/ RECORD	BYTES/ MAP
CHANNEL 1(VIS)	1.9844	1632	2304	3,760,128
CHANNELS 2(3.9u), 3(6.5u) & 4(11u)	7.9375	408	576	235,008
CHANNEL 6(13u)	15.8750	204	288	58,752

Table 4.12 Size and Format Specifications of NH PSG Composite Maps (earth radius 6371.2 km, resolution at 60 N)
GOES 8-11:

PRODUCT DESCRIPTION	RES. IN KMS	# RECORDS/ IMAGE	BYTES/ RECORD	BYTES/ MAP
CHANNEL 1(VIS)	24.0000	512	1024	524,288
CHANNELS 2(3.9u), 4(11u) & 5(12u)	24.0000	512	1024	524,288
CHANNEL 3(6.7u,WV)	24.0000	512	1024	524,288

GOES 12 & N:

PRODUCT DESCRIPTION	RES. IN KMS	# RECORDS/ IMAGE	BYTES/ RECORD	BYTES/ MAP
CHANNEL 1(VIS)	24.0000	512	1024	524,288
CHANNELS 3(6.5u) & 4(11u)	24.0000	512	1024	524,288

Note - Channel 2 and 5 composites will be dropped from both the GOES East and West feed around the time of GOES-12 activation.

Table 4.13 Size and Format Specifications of Super National PSG Composite Maps (earth radius 6371.2 km, resolution at 60 N)
GOES 8-11:

PRODUCT DESCRIPTION	RES. IN KMS	# RECORDS/ IMAGE	BYTES/ RECORD	BYTES/ MAP
CHANNEL 1(VIS)	7.9375	1008	1536	1,548,288

CHANNELS 2(3.9u), 4(11u) & 5(12u)	7.9375	1008	1536	1,548,288
CHANNEL 3(6.7u,WV)	7.9375	1008	1536	1,548,288

GOES 12 & N:

PRODUCT DESCRIPTION	RES. IN KMS	# RECORDS/ IMAGE	BYTES/ RECORD	BYTES/ MAP
CHANNEL 1(VIS)	7.9375	1008	1536	1,548,288
CHANNELS 3(6.5u) & 4(11u)	7.9375	1008	1536	1,548,288

* Note - Channel 2 and 5 composites will be dropped from both the GOES East and West feed around the time of GOES-12 activation.

Table 4.14 Size and Format Specifications of Alaska National And Puerto Rico National PSG Maps [AK-vertical 150W, PR-vertical 60W] (earth radius 6371.2 km, resolution at 60 N)

PRODUCT DESCRIPTION	RES. IN KMS	# RECORDS/ IMAGE	BYTES/ RECORD	BYTES/ MAP
CHANNEL 1(VIS)	8.2826	874	1012	884,488
CHANNEL 4(IR)	8.2826	874	1012	884,488
CHANNEL 3(6.7/6.5u,WV)	8.2826	874	1012	884,488

Note: For GOES 8-11, the channel 3 imagery is 6.7um; for GOES-12 & N, the channel 3 imagery is 6.5um.

Table 4.15 Size and Format Specifications of Hawaii National Mercator Maps (earth radius 6371.2 km, resolution at 20 N)

PRODUCT DESCRIPTION	RES. IN KMS	# RECORDS/ IMAGE	BYTES/ RECORD	BYTES/ MAP
CHANNEL 1(VIS)	14.5455	737	1012	745,844
CHANNEL 4(IR)	14.5455	737	1012	745,844
CHANNEL 3(6.7/6.5u,WV)	14.5455	737	1012	745,844

Note: For GOES 8-11, the channel 3 imagery is 6.7um; for GOES-12 & N, the channel 3 imagery is 6.5um.

Table 4.16 Size and Format Specifications of Multi-Satellite PSG Composite Maps (Satellites: METEOSAT, GOES East, GOES West, GMS) (earth radius 6371.2 km, resolution at 60 N)

PRODUCT DESCRIPTION	RES. IN KMS	# RECORDS/ IMAGE	BYTES/ RECORD	BYTES/ MAP
VISIBLE	23.8125	1024	1024	1,048,576
IR	23.8125	1024	1024	1,048,576
WV	23.8125	1024	1024	1,048,576

Note: For Tables 4.9 - 4.16, resolution is approx. nominal pixel size in kms

4.4 DEFINITION OF IMAGER CALIBRATION COEFFICIENTS ARRAYS

The Imager Calibration Coefficients Array field in the Product Definition Block (PDB), bytes 44 - 91, contains a set of terms used in calibration equations. The field is defined as being 48 bytes in length, however, for all but VIS products only a portion of the field is meaningful. Any unused bytes in the field will be zero filled.

For VIS products this field contains a total of 24 (2 byte integer) terms, 3 terms (bias, gain and quadratic in that order) for detectors 1-8 (in that order).

For IR products the Imager Calibration Coefficients Array contains a total of 6 (2-byte integer terms, 3 terms (bias, gain and quadratic in that order) for detectors 1-2. The equation used to derive calibration information for each of the GOES products is:

$$R = a_0 + a_1 c + a_2 c^2$$

where
- R = radiance
- a_0 = bias
- a_1 = gain
- a_2 = quadratic (non-linearity coefficient)
- c = raw sensor output or "count"

The calibration coefficients will be provided in the remapped GOES Product Definition Block (PDB).

For WV products, the above equation applies, with the exception that only one detector is defined. Thus, there are 3 terms (bias, gain, and quadratic) for a single detector in the Imager Calibration Coefficients Array field of the header for WV products.

The Imager Calibration Coefficients Array field is zero filled for DR products. It does not have meaning for these products.

4.5 RECORD DEFINITION

Each record identified within a remapped GOES product corresponds to one scan line of the image. The size of each scan line is given in bytes 7-8 of the Product Definition Block (PDB). Each pixel in an image is represented by one byte (8 bits), and is binary in form. The most significant bit of the pixel is the first bit in the 8 bit field.

For VIS products each pixel represents a brightness with a range of binary 0 = dark to 254 = bright.

For IR and WV products each pixel represents a radiance with a range of binary 0 = warm to 254 = cold.

For all remapped products the binary value 255 is reserved to indicate missing or bad data.

4.6 END OF PRODUCT

The end of each product is explicitly defined as a full record (based on record length of product) of interleaved bytes equal to binary 255 and binary 0, with the first byte of the record = 255.

4.7 DESCRIPTION OF AWIPS MAP REGISTRATION METHODOLOGY

The following paragraphs describe the methodology used for the AWIPS image corner point calculations, the image product resolution calculation, the spherical earth radius assumptions, and the elliptical earth model based overlay maps.

4.7.1 AWIPS OVERLAY MAPS ARE BASED ON AN ELLIPTICAL EARTH

AWIPS overlay maps are based on an elliptical earth model - the GRS80 or NAD83 reference ellipsoid with equatorial radius 6378137 meters and polar radius 6356752.314 meters. Rather than requiring these maps to be projected onto a spherical earth before conversion to image map projections, AWIPS requires all other data types to be referenced to this elliptical earth model before conversion to image map projections. A datum from geodetic (elliptical) latitude PHI and longitude THETA would be plotted on the image at image projection latitude PHI and longitude THETA, its correct position relative to the overlay maps. As a result, the latitude of any datum from an AWIPS image is to be interpreted as a geodetic (elliptical) latitude.

4.7.2 AWIPS IMAGE CORNER POINTS CALCULATION AND SPHERICAL EARTH RADIUS IMPORTANCE

All AWIPS image types except one - the Northern Hemisphere Composite - are defined relative to National Weather Service AWIPS grids defined in NCEP Office Note 388; the image corner point locations are certain grid point locations. Each grid is a rectangular array of points from a particular projection of a spherical earth surface onto a plane; the projection type is

Lambert Conformal, Polar Stereographic, or Mercator. Office Note 388 further defines each grid by giving values for Dx, the distance on the earth's surface, at a reference latitude, corresponding to the separation between grid columns, and Dy, the distance on the earth's surface, at the reference latitude, corresponding to the separation between grid rows. The latitude and longitude of one grid point are also specified. Given a latitude and longitude of a grid point, the value Dx defines the distance to the next grid point of that row and the latitude and longitude of that next point is calculated applying the radius of the assumed spherical earth.

Although Office Note 388 (March 10, 1998, version) specifies an assumed spherical earth radius of 6367.47 kilometers (Section 2, Page 17, Table 7), the radius actually used to calculate latitudes and longitudes of the corner points is 6371.2 kilometers. AWIPS also uses spherical earth radius 6371.2 kilometers for calculating grid point latitudes and longitudes.

Northern Hemisphere Composite corner point latitudes and longitudes were calculated by finding the corner grid point locations of a 513 row by 1025 grid point array with 24.0000 kilometers (assuming an earth radius of 6371.2 kilometers) between adjacent points at 60 deg N and with the 513th point of the top line at the north pole.

4.7.3 AWIPS IMAGE PRODUCT RESOLUTIONS CALCULATION

For all AWIPS image products except the Northern Hemisphere Composite, the images are produced by embedding some integral number of image rows and pixels between the grid rows and columns of the NWS Office Note 388 grids with respect to which the images are specified. Office Note 388 states the earth distance (Dx and Dy) between grid points at the reference latitude. Suppose the image is produced by embedding W pixels between adjacent grid points. Then the image resolution is (Dx or Dy) / W. Thus, for example, the resolution of the East CONUS Lambert visible image at 25 N is (81.2705 kilometers) / 80 = 1.0159 kilometers.

The resolution of the Northern Hemisphere Composite is simply defined to be 24.0000 kilometers.

Note that for all image products, the lower left corner pixel is not centered at the lower left corner gridpoint latitude and longitude, but is "offset" by a half pixel so that the lower and left pixel edges lie along the lower and left sides of the rectangle defined by the corner points. Similarly, all pixels

lie within the rectangle. Also note that the resolution at 25 N of 1.0159 kilometers conforms to the AWIPS specification of 1.000 kilometer at 35 N.

THIS PAGE INTENTIONALLY LEFT BLANK

EXHIBIT A

ANSI/IEEE 802.2-ANSI/IEEE 802.3 Standard

vs.

Digital Equipment Corp, Intel Corp, and Xerox Corp.
(DIX) Ethernet LAN Standard, Version 2.0

THIS PAGE INTENTIONALLY LEFT BLANK

EXHIBIT A: ANSI/IEEE 802.2-802.3 verses DIX Ethernet, Version 2.0

1.0 INTRODUCTION

The latest Digital Equipment Corporation, Intel Corporation, and Xerox Corporation (DIX) Ethernet standard is now over 12 years old. Once IEEE 802.3 became a standard, DEC, Intel and Xerox stopped issuing updates to The Ethernet Local Area Network Specification. As shown in Section 2.0 of the AWIPS/NESDIS ICD, the last version of this Ethernet Standard was Version 2.0 which was issued in 1982. Ethernet Version 2.0 was very similar to the early versions of IEEE 802.3, but as the IEEE 802.3 standard matured, a few substantive, technical, differences appeared. This exhibit is not intended to be an exhaustive treatise on variations in these standards. It is provided as background material only. The reader is advised to refer to the referenced standards documents for the specific technical details of these protocols. The following paragraphs summarize the major differences in these standards:

2.0 AUI/Transceiver Interface

Differences in the way the Attached Unit Interface (AUI)/transceiver interface was defined caused compatibility problems when mixing Ethernet v2.0 nodes and IEEE 802.3 transceivers or ANSI/IEEE 802.3 nodes and Ethernet v2.0 transceivers in the early IEEE 802.3 product offerings. Eventually, the various vendors found ways to implement the IEEE 802.3 specification that were tolerant of devices built to the Ethernet Version 2.0 specification. This is not a very important factor in terms of equipment interoperabilty for the AWIPS/NESDIS interface since it pertains mainly to the "THICK Ethernet", 10BASE5 implementations rather than the 10BASE2 and 10BASET implementations for which the AUI/transceiver interface is internal to the host computer.

3.0 TYPE FIELD VS. LENGTH FIELD

The most notable DIX Ethernet V 2.0 feature that is still common in today's ANSI/IEEE 802.3 networking products is the difference in frame format with regard to the TYPE/LENGTH field. Ethernet Version 2.0 frames have a two octet type field following the Source address. This Ethernet type field is used to determine which client protocol (eg. IP, AppleTalk, IPX, etc) the

TABLE A-1

The DIX (or Bluebook) Ethernet packet header consists of a destination address, source address, type, and data, as shown below:

DIX Ethernet Packet Header

Destination Address 6	Source Address 6	Type 2	Data

Type:
0x0800 = IP
0x6004 = DECLAT
0x0804 = CHAOSNET
0x6010-0x6014 = 3COM
0x0806 = ARP

TABLE A-2

The IEEE 802.3/802.2 Ethernet specification is a variation on the DIX Ethernet specification. An IEEE 802.3/802.2 Ethernet packet header uses the Ethernet type field as a length field, as shown in below:

IEEE 802.3/802.2 Ethernet Packet Header

DST 6	SRC 6	LEN 2	DSAP 1	SSAP 1	CTL 1	DATA

--------- 802.3 ------- ---------- 802.2 ----------

frame is for. ANSI/IEEE 802.3 frames have a two octet length field in this position and use the 802.2 LLC to accomplish what Ethernet does in the type field. Tables A-1 and A-2 shows the difference in DIX Ethernet and ANSI/IEEE 802.3 framing. Very few networks use the IEEE 802.3 framing format today, and the AAO has analyzed several different NOAA TCP/IP host computers and networks with a network analyzer and has found that all networks and hosts surveyed utilized the older DIX Ethernet framing including the type field.

The value of the IEEE 802.3 length field is always less than 1518 decimal (or 0x5EE hex) and no DIX Ethernet V 2.0 type fields used today are less than that. Only a few protocol types were numbered below 0x600 when IEEE formalized the 802.3 standard, and those protocol numbers were retired and assigned new numbers above 0x600. Therefore, any packet with a valid length (< 0x600) is a IEEE 802.3 packet. Any others (> 0x600) are standard DIX Ethernet version 2.0 packets. It is possible for a node to detect which frame format is in use and the two formats can both be used on the same network. In theory the DIX Ethernet version 2.0 and ANSI/IEEE 802.3 framing are interoperable. In practice, however, interoperability between one host using DIX Ethernet v2.0 framing and another host using ANSI/IEEE 802.3 framing depends on the specific vendors' hardware and software implementations. If all hosts on a network utilize the same framing (either Ethernet v2.0 or ANSI/IEEE 802.3) then interoperability at the physical layer may be assumed.

4.0 REPEATER DEFINITION

The initial DIX Ethernet Version 2.0 repeater definition was inadequate. An improved repeater specification was standardized in 1985 and appears in current editions of ANSI/IEEE 802.3. All modern repeaters and hubs are made to the post 1985 IEEE 802.3 specification.

5.0 MEDIA TYPES SUPPORTED

Only the thick coaxial media and transceiver were specified in DIX Ethernet V 2.0. The other transceivers and media types such as: 10BASE2, 10BASE-T, etc appeared only in the ANSI/IEEE 802.3 standard.

6.0 MAC SUB-LAYER IMPROVEMENT

A small but important modification to the MAC sublayer was included in the ANSI/IEEE 802.3 standard that did not appear in the DIX Ethernet V 2.0 standard. This "improvement" forces the MAC mechanism to listen for the carrier to return during the first part of inter-packet gap and will continue to wait (or defer) if it senses a carrier. A MAC without this improvement will start the interpacket gap timer when the carrier goes away and will transmit when the timer expires (assuming it has other packets in the transmit queue). All modern ANSI/IEEE 802.3 implementations utilize this "improved" MAC algorithm.

7.0 LINK CONTROL

Ethernet version 2 combined the LLC and MAC functions into a single protocol. ANSI/IEEE provides these functions via separate LLC and MAC protocols. Also, Ethernet version 2 provided for only unacknowledged, connectionless service.

8.0 REFERENCES

Internetworking with TCP/IP, Second Edition by Douglas Comer, pp 20-29

_____Handbook of Computer Communications Standard, William Stallings, pp 53-116

Manual: Using LANWATCH Network Analyzer 4.0, by FTP Software, Inc, 1994 Appendix C.

International Standard ISO 8802-2 : 1989
[ANSI/IEEE Standard 802.2, : 1989]
(Revision of ANSI/IEEE Std. 802.2-1985)
Part 2: Logical Link Control

International Standard ISO/IEC 8802-3 : 1993
[ANSI/IEEE Standard 802.3, 1993 Edition]
Part 3: Carrier Sense Multiple Access with Collision Detection (CSMA/CD) Access Method and Physical Layer Specifications

_____Digital Equipment Corp, Intel Corp, Xerox Corp (DIX). Ethernet Local Area Network Specification Version 2.0. November 1982

EXHIBIT B

IP, TCP, UDP, ARP, and ICMP Header Information

THIS PAGE INTENTIONALLY LEFT BLANK

TABLE B-1

The Internet Protocol (IP) packet header is shown below: Note that the IP checksum includes only the IP header.

IP Packet Header Information

VER	IHL	TOS	Length	ID	FLAG	Frag Offset	TTL	PROT	Header Checksum	Source Address	Destin. Address	Options	Pad-ding	DATA
4	4	1	2	2	3	13	1	1	1	4	4	(N-5)* 4 Bytes		

VER: The version of IP used in this packet
IHL: IP header length in 32-bit words
The value equals 5 (base header length) plus the number of 32-bit option words
TOS: Type of service

precedence D T R reserved
0 1 2 3 4 5 6 7 (bits)

FLAG: (3 bits)
bit 0: reserved
bit 1: 0 = may fragment, 1 = dose not fragment
bit 2: 0 = last fragment, 1 = more fragment
Frag Offset: location of this fragment in the original packet in 8-byte units

TTL: time to live
decremented by each machine to pass the packet

PROT: the protocol above IP for this packet to be delivered

Values for some well-know protocols are:

precedence:
111 = network control
110 = internetwork control
010 = immediate

1 = ICMP
16 = CHAOS
17 = UDP
29 = TP4

9 = IGP
101 = critical/ECP
001 = priority
001 = flash override
000 = routine

3 = GGP
6 = TCP
8 = EGP

D: Delay
0 = regular delay
1 = low delay

T: Throughput
0 = normal
1 = high

Options:

C	Class	Option Number
0	1 2	3 4 5 6 7 (bits)

C: (1 bit) Copy flag.
0 = not copied to fragments
1 = copy of fragments

TABLE B-2

The Address Resolution Protocol (ARP) packet header ARP is shown below:

ARP Packet Header Information

Hardware Type	Prot Type	Hardware Length (n)	Protocol Length (m)	OP Code	Source Physical Address	Source Protocol Address	Destination Physical Address	Destination Physical Protocol Address
2 value = N	2 value=M	1	1	2	6(N)	4(M)	6(N)	4(M)

ARP Hardware Types
1 = Ethernet (10 MB)
2 = Ethernet (3MB)
3 = Amateur Radio AX.25
4 = Proteon ProNET Rings
5 = CHAOSNET

Protocol Type: Same as DIX Ethernet Type
Hardware Length: Length in bytes of the hardware address
Used as the length of the source and destination physical address fields
For Ethernet and 802.5 Token Ring, the length is 6 bytes.
Protocol length: Length in bytes of the protocol address
Used as the length of the source and destination protocol address fields

TABLE B-3

The Transmission Control Protocol (TCP) packet header information for TCP shown below. Note that the TCP checksum covers the TCP data and header.

TCP Packet Header Information

Src Port	Dest Port	Seq Number	ACK Number	OFF	FLAGS	Window	Check-sum	Urgent Pointer	Op-tions	Pad-ding	DATA
2	2	4	4	4	12	2	2	2	(L-5)*4 Bytes		

Well-known source and destination ports:

20 = ftp data	25 = smtp
21 = ftp control	95 = supdup
23 = telnet	520 = route

OFF: (data offset) number of 32-bit words in the TCP header

FLAGS:

reserved	urg	ack	psh	syn	fin
0 1 2 3 4 5	6	7	8	10	11

Bits

urg: urgent filed used
ack: packet has valid acknowledgment
psh: push data to above level
rst: reset this connection
syn: synchronize sequence numbers
fin: close my side of the connection

Window: amount of data the sender is willing to accept
Urgent Pointer: offset from the current sequence number to the octet following the urgent data
Options: options are in 32-bit words
0x00 = end of options
0x01 = padding byte (to align further options on a 32-bit boundary)
0x02 = MSS: Maximum Segment Size (as shown below)

1 byte	1 byte	2 bytes
option	size	data
0x02	0x04	

MSS size

TABLE B-4

The User Datagram Protocol (UDP) packet header information shown below:

UDP Packet Header Information

Src Port	Dest Port	Length	Checksum	Data
2	2	2	2	

Well-known source and destination ports:
37 = TIME
42 = IEN name server
53 = Domain name server
67 = BOOTP server
69 = TFTP

TABLE B-5

The Internet Control Message Protocol (ICMP) packet header information shown below:

ICMP Packet Header Information

Type 1	Code 1	Checksum 2	Reserved 4	Data

Type	**Code**
0 = Echo reply	0 = not used **Data:** Copy of data sent
3 = Destination unreachable	0 = net unreachable 3 = prot unreachable 1 = host unreachable 4 = fragmentation needed and df set 2 = protocol unreachable 5 = source route failed
4 = Source quench	0 = not used
5 = Redirect	0 = network redirect 2 = type of service network redirect 1 = host redirect 3 = type of service host redirect
8 = Echo request	0 = not used **Data:** Data to be returned
11 = Time exceeded	0 = ttl exceeded 1 = fragmentation reassembly timeout
12 = Parameter problem	0 = pointer indicates error The pointer is the octet number of the first incorrect octet.
13 = Request time	0 = not used **Data:** Three 32-bit words, the origin timestamp, the receive timestamp, and the transmit timestamp in milliseconds since midnight UT.
14 = Reply time	0 = not used **Data:** Three 32-bit words, the origin timestamp, the receive timestamp, and the transmit timestamp in milliseconds since midnight UT.
15 = Information request	0 = not used The IP addresses in the request packet are set to zero; the replying packet should specify both addresses.
16 = Information reply	0 = not used The IP addresses in the request packet are set to zero; the replying packet should specify both addresses.
17 = Address mask request	0 = not used **Data:** An all-zero IP address

THIS PAGE INTENTIONALLY LEFT BLANK

EXHIBIT C

Request for Comments: 854
J. Postel, J. Reynolds
Obsoletes RFC: 764 (NIC 18639)
May 1983

TELNET

THIS INFORMATION (RFC 854) HAS BEEN SUPPLIED

EXHIBIT D

Network Working Group
Request for Comments: 959
J. Postel, J. Reynolds
Obsoletes RFC: 765 (IEN 149)
October 1985

FILE TRANSFER PROTOCOL (FTP)

THIS INFORMATION (RFC 959) HAS BEEN SUPPLIED

EXHIBIT E

Special Sensor Microwave Imager

THIS PAGE INTENTIONALLY LEFT BLANK

Interface Control Document

for

SPECIAL SENSOR MICROWAVE IMAGER (SSMI)

Orbit–by–Orbit Microwave Derived Products (EDR)

John Pritchard
NOAA/NESDIS

LaShawn Dennis
NOAA/NESDIS

THIS PAGE INTENTIONALLY LEFT BLANK

Table of Contents

1.0 SCOPE 1
1.1 BACKGROUND 1

2.0 REFERENCE DOCUMENTS 1
2.1 STANDARDS PRECEDENCE 4

3.0 INTERFACE CHARACTERISTICS 5
3.1 PHYSICAL LAYER 5
3.1.1 BASEBAND MEDIUM 5
3.2 DATA LINK LAYER 5
3.2.2 MEDIA ACCESS CONTROL SUBLAYER 5
3.2.3 LLC SUBLAYER 6
3.3 NETWORK LAYER 6
3.4 TRANSPORT LAYER 6
3.5 SESSION LAYER 6
3.6 PRESENTATION LAYER 6
3.7 APPLICATION LAYER 6
3.7.1 TELNET PROTOCOL 7
3.7.2 FILE TRANSFER PROTOCOL (FTP) 7

4.0 PRODUCT STRUCTURE 10
4.1 NESDIS INTERFACE PRODUCT IDENTIFICATION 10
4.2 REMAPPED GOES SATELLITE PRODUCT FORMAT SPECIFICATION . 14
4.3 HEADER DEFINITION 14
4.4 DEFINITION OF IMAGER CALIBRATION COEFFICIENTS ARRAYS 29
4.5 RECORD DEFINITION 29
4.6 END OF PRODUCT 30
4.7 DESCRIPTION OF AWIPS MAP REGISTRATION METHODOLOGY . . 30
4.7.1 AWIPS OVERLAY MAPS ARE BASED ON AN ELLIPTICAL EARTH 30
4.7.2 AWIPS IMAGE CORNER POINTS CALCULATION AND SPHERICAL EARTH RADIUS IMPORTANCE 30
4.7.3 AWIPS IMAGE PRODUCT RESOLUTIONS CALCULATION . . . 31

EXHIBIT A A-1

EXHIBIT B B-1

EXHIBIT C C-1

EXHIBIT D D-1

EXHIBIT E E-1

1.0 Introduction 1-1

2.0 Data Set Format Description 2-1
2.1 Special Sensor Microwave Imager (SSMI) Intermediate Database Format Description 2-2
2.1.1 Dataset Abstract for SSMI Intermediate Database (IDB) 2-3
2.1.2 File Structure 2-3
2.1.3 Directory Record Description 2-4
30 Orbit Starting Record 2-4
EDR Product Identification Block 2-6
EDR Data Sequence Block 2-7
Rev Header Data Description Block 2-8
EDR Scan Header Data Description Block 2-13
EDR Data Description Block 2-14
Rev Header Data Description Block 2-20
2.1.4 Data Record Format Description 2-21
EDR Scan Header Block 2-22
EDR Data Block Format 2-23

3.0 Programmer Note 3-1
IDB OUTPUT RECORD 3-3

APPENDIX A A-1
EDR PRODUCT IDENTIFICATION BLOCK A-1
EDR DATA SEQUENCE BLOCK A-2
REV HEADER DATA DESCRIPTION BLOCK A-3
EDR SCAN HEADER DATA DESCRIPTION BLOCK A-9
EDR DATA DESCRIPTION BLOCK A-10
REV HEADER DATA BLOCK FORMAT A-17

APPENDIX B B-1
EDR SCAN HEADER BLOCK FORMAT B-1
EDR DATA FORMAT BLOCK B-2

EXHIBIT F F-1

EXHIBIT G G-1

List of Acronyms

CEMSCS	Central Environmental Satellite Computer System
DEF	Data Exchange Format
DMSP	Defense Meteorological Support Program
EDR	Environmental Data Record
FNOC	Fleet Numerical Oceanography Center
IDB	Intermediate database
NESDIS	National Environmental Satellite, Data and Information Service
SSMI	Special Sensor Microwave Imager

1.0 Introduction

Environmental Data Record (EDR) data sets are formatted into the Shared Processing Data Exchange Format (DEF) at Fleet Numerical Oceanography Center (FNOC). They are transmitted to National Environmental Satellite, Data and Information Service (NESDIS) via communication satellite, and given a data set name to identify it on the NESDIS Computer Central Environmental Satellite Computer System (CEMSCS). There are approximately 143 orbits acquired during a 23 hour period, but only 10 of these orbits will reside on the CEMSCS at any given time. Data is from each of the 2 Defense Meteorological Support Program (DMSP) polar orbiting satellites [DMSP F–10(S4) and F–11(S5)].

Upon the generation of the above data set, the data is converted from the DEF to the Intermediate database (IDB) format. Each data set has up to 1725 records of 1300 eight-bit bytes of data and is stored into the IDB as one of 30 blocks aligned to 1725 records boundaries. The alignment is based upon the orbit number.

The following section describes the IDB format in detail.

THIS PAGE INTENTIONALLY LEFT BLANK

2.0 Data Set Format Description

SHARED PROCESSING PRODUCTION SYSTEMS

DATA SET FORMAT DESCRIPTION

DATA SET NAME: COM.PSATAVSP.SHAREPR.F10IDB

DATA SET TITLE: FNOC DERIVED EDR IDB FROM DMSP F10

DATE OF DOCUMENTATION: 2/9/83 BY: JOHN PRITCHARD
REVISED: _____ BY: _____
REVISED: _____ BY: _____
REVISED: _____ BY: _____
REVISED: _____ BY: _____

DISK

UNIT = DISC (3380)

DCB = (RECFM = F, LRECL = 1300, BLOCK SIZE = 1300,
DSORG = PS

SPACE = 128 CYLINDERS

NUMBER OF RECORDS - 51,750

VOL = SER= NSS501

TAPE

UNIT = NONE

DCB = RECFM = _____, LRECL = _____, BLKSIZE = _____,
DEN = _____

LABEL = _____

NUMBER OF RECORDS = _____

VOL = SER = _____

2.1 Special Sensor Microwave Imager (SSMI) Intermediate Database Format Description

SHARED PROCESSING PRODUCTION SYSTEMS

DATA SET FORMAT DESCRIPTION

DATA SET NAME: COM.PSATAVSP.SHAREPR.F11IDB

DATA SET TITLE: FNOC DERIVED EDR IDB FROM DMSP F11

DATE OF DOCUMENTATION: 2/8/83 BY: JOHN PRITCHARD
REVISED: _____ BY: _____
REVISED: _____ BY: _____
REVISED: _____ BY: _____
REVISED: _____ BY: _____

DISK

UNIT = DISC (3380)

DCB = (RECFM = F, LRECL = 1300, BLOCK SIZE = 1300,
DSORG = PS

SPACE = 128 CYLINDERS

NUMBER OF RECORDS = 51,750

VOL = SER= NSS501

TAPE

UNIT = NONE

DCB = RECFM = _____, LRECL = _____, BLKSIZE = _____,
DEN = _____

LABEL = _____

NUMBER OF RECORDS = _____

VOL = SER = _____

2.1.1 Dataset Abstract for SSMI Intermediate Database (IDB)

The Intermediate Database is generated by processing FNOC data sets into a rotating database of 30 sequences. The first record of each of the sequences is composed of 6 data ID blocks from the first DEF text field and put into a zero filled record of 1300 bytes. The data part of the record consists off a 12 byte "Scan Header Block" and 1300 bytes of the "Data Block" which are written to a record of 1300 bytes. This is repeated until the end of the data set (1725 lines). This database contains both Northern and Southern Hemisphere data.

2.1.2 File Structure

The file structure and database attributes of

COM.PSATAVSP.SHAREPR.F10IDB FOR DMSPF10

and

COM.PSATAVSP.SHAREPR.F11IDB FOR DMSPF11

are enumerated below.

2.1.3 Directory Record Description

The Directory Record of each of the 30 orbits contains six descriptions blocks which are defined in terms of words consisting of a combination of 32-bits, 16-bits, and 8-bits.

Description Blocks

1. EDR IDENTIFICATION BLOCK
2. EDR DATA SEQUENCE BLOCK
3. REV HEADER DATA DESCRIPTION BLOCK
4. EDR SCAN HEADER DATA DESCRIPTION BLOCK
5. EDR DATA DESCRIPTION BLOCK
6. REV HEADER DATA BLOCK FORMAT

The starting line of a record number of each of the orbits remains constant and is given below.

30 Orbit Starting Record

Orbit Number	Starting Directory Record		Data Record	
1	1	(See Appendix A)	2-1725	(See Appendix B)
2	1726		1727-3450	
3	3451		3452-5175	
4	5176		5177-6900	
5	6901		6902-8625	
6	8626		8627-10350	
7	10351		10352-12075	
8	12076		12077-13800	
9	13801		13802-15525	
10	15526		15527-17250	
11	17251		17252-18975	
12	18976		18977-20700	
13	20701		20702-22415	
14	22426		22427-24150	
15	24151		24152-25875	
16	25876		25877-27600	
17	27601		27602-29325	
18	29326		29327-31050	

Orbit Number	Starting Directory Record	Data Record
19	31051	31052-32775
20	32776	32777-34550
21	34501	34502-36225
22	36226	26227-37950
23	37951	37952-39675
24	39676	39675-41400
25	41401	41402-43125
26	43126	43127-44850
27	44851	44852-46575
28	46576	46577-48300
29	48301	48302-50025
30	50026	50027-51750

EDR Product Identification Block

Data Word	Type	Contents	Comments
1	I*2	Block Length	Length of Block in Terms of I*2 Words (14)
2	Byte	Mode	Binary 8-bit Number (1)
3	Byte	Submode	Binary 8-bit Number (1)
4	C*4	Originator ID	Four Character (FNOC)
5	C*1	Classification	One Character (U)
6	Byte	File Lifetime	Binary 8-bit Number (255)
7	C*10	Product Identifier	10 Characters TSMIEDR 10
8	I*2	Year	Binary Number
9	Byte	Month	Binary 8-bit Number
10	Byte	Day	Binary 8-bit Number
11	Byte	Hour	Binary 8-bit Number
12	Byte	Minute	Binary 8-bit Number
13	I*2	Checksum	Binary number

EDR Data Sequence Block

Data Word	Type	Contents	Comments
1	I*2	Block length	Length of block in term of I*2 Words (13)
2	Byte	MODE	Binary 8-bit Number (3)
3	Byte	SUBMODE	Binary 8-bit Number (19)
4	I*2	Number of Loops	Three
5	Byte	Start Number	Binary 8-bit Number
6	Byte	Loop Number	Binary 8-bit Number (1)
7	I*2	Number of Data Blocks	Binary 16-bit number (1)
8	Byte	End Number	Binary 8-bit Number
9	Byte	Loop Number	Binary 8-bit Number
10	Byte	Start Number	Binary 8-bit Number
11	Byte	Loop Number	Binary 8-bit Number (2)
12	I*2	Number of Data Blocks	HDR Data Block (3)
13	Byte	Start Number	Binary 8-bit Number
14	Byte	Loop Number	Binary 8-bit Number (3)
15	I*2	Number of Data Blocks	Binary 16-bit Number (1)
16	Byte	END Number	Binary 8-bit Number
17	Byte	Loop Number	Binary 8-bit Number (3)
18	Byte	End Number	Binary 8-bit Number
19	Byte	Loop Number	Binary 8-bit Number (2)
20	I*2	Checksum	Calc in SMIDEF

Rev Header Data Description Block

Data Word	Type	Contents	Comments
1	I*2	Block length	Length of Block in Terms of I*2 Words (95)
2	Byte	Mode	Binary 8-Bit Number (3)
3	Byte	Submode	Binary 8-Bit Number (17)
4	Byte	Number Elements	Binary 8-Bit Number (15)
5	Byte	Bytes/Section	Binary 8-Bit Number (24)
6	I*2	Number of Section	Binary Number (1)
7	C*4	Spacecraft ID	Character String "SCID"
8	Byte	Start Byte	Binary 8-Bit Number (4)
9	Byte	Bytes/Elements	Binary 8-Bit Number (4)
10	I*2	Units Code	Combination of Zero Filled Byte and Unit Code (19)
11	Byte	Mult. Mantissa	Binary 8-Bit Number (1)
12	Byte	Exponent	Binary 8-Bit Number (0)
13	I*2	Additive Constant	Binary Number (0)
14	C*4	Rev/Orbit Number	Character String "REV#"
15	Byte	Start Byte	Binary 8-Bit Number (8)
16	Byte	Bytes/Elements	Binary 8-Bit Number (4)
17	I*2	Units Code	Combination of a Zero Filled Byte and Unit Code (19)
18	Byte	Mult. Mantissa	Binary 8-Bit Number (1)
19	Byte	Exponent	Binary 8-Bit Number (0)
20	I*2	Additive Constant	Binary Number
21	C*4	Julian Day Data Begins	Character String "BJLD"
22	Byte	Start Byte	Binary 8-Bit Number (12)

Data Word	Type	Contents	Comments
23	Byte	Bytes/Elements	Binary 8-Bit Number (2)
24	I*2	Units Code	Combination of a Zero Filled Byte and Unit Code (51)
25	Byte	Mult. Mantissa	Binary 8-Bit Number (1)
26	Byte	Exponent	Binary 8-Bit Number (0)
27	I*2	Additive Constant	Binary Number (0)
28	C*4	Hour of Day Data Begins	Character String "BHR"
29	Byte	Start Byte	Binary 8-Bit Number (14)
30	Byte	Bytes/Elements	Binary 8-Bit Number (1)
31	I*2	Units Code	Combination of a Zero Filled Byte and Unit Code (50)
32	Byte	Mult. Mantissa	Binary 8-Bit Number (1)
33	Byte	Exponent	Binary 8-Bit Number (0)
34	I*2	Additive Constant	Binary Number (0)
35	C*4	Minute of Day Data Begins	Character String "BMN"
36	Byte	Start Byte	Binary 8-Bit Number (15)
37	Byte	Bytes/Elements	Binary 8-Bit Number (1)
38	I*2	Units Code	Combination of a Zero Filled Byte and Unit Code (49)
39	Byte	Mult. Mantissa	Binary 8-Bit Number (1)
40	Byte	Exponent	Binary 8-Bit Number (0)
41	I*2	Additive Constant	Binary Number (0)
42	C*4	Second of Min. Data Begins	Character String "BSEC"
43	Byte	Start Byte	Binary 8-Bit Number (16)
44	Byte	Bytes/Elements	Binary 8-Bit Number (1)
45	I*2	Units Code	Combination of a Zero Filled Byte and Unit Code (12)

Data Word	Type	Contents	Comments
46	Byte	Mult. Mantissa	Binary 8-Bit Number (1)
47	Byte	Exponent	Binary 8-Bit Number (0)
48	I*2	Additive Constant	Binary Number (0)
49	C*4	Julian Day Data Ends	Character String "EJLD"
50	Byte	Start Byte	Binary 8-Bit Number (17)
51	Byte	Bytes/Elements	Binary 8-Bit Number (2)
52	I*2	Units Code	Combination of a Zero Filled Byte and Unit Code (51)
53	Byte	Mult. Mantissa	Binary 8-Bit Number (1)
54	Byte	Exponent	Binary 8-Bit Number (0)
55	I*2	Additive Constant	Binary Number (0)
56	C*4	Hour of Day Data Ends	Character String "EHR"
57	Byte	Start Byte	Binary 8-Bit Number (19)
58	Byte	Bytes/Elements	Binary 8-Bit Number (1)
59	I*2	Units Code	Combination of a Zero Filled Byte and Unit Code (50)
60	Byte	Mult. Mantissa	Binary 8-Bit Number (1)
61	Byte	Exponent	Binary 8-Bit Number (0)
62	I*2	Additive Constant	Binary Number (0)
63	C*4	Minute of Hour Data Ends	Character String "EMN"
64	Byte	Start Byte	Binary 8-Bit Number (20)
65	Byte	Bytes/Elements	Binary 8-Bit Number (1)
66	I*2	Units Code	Combination of a Zero Filled Byte and Unit Code (49)
67	Byte	Mult. Mantissa	Binary 8-Bit Number (1)
68	Byte	Exponent	Binary 8-Bit Number (0)
69	I*2	Additive Constant	Binary Number (0)

Data Word	Type	Contents	Comments
70	C*4	Second of Minute Data Ends	Character String "ESEC"
71	Byte	Start Byte	Binary 8-Bit Number (21)
72	Byte	Bytes/Elements	Binary 8-Bit Number (1)
73	I*2	Units Code	Combination of a Zero Filled Byte and Unit Code (12)
74	Byte	Mult. Mantissa	Binary 8-Bit Number (1)
75	Byte	Exponent	Binary 8-Bit Number (0)
76	I*2	Additive Constant	Binary Number (0)
77	C*4	Day of Ascending Node	Character String "AJLD"
78	Byte	Start Byte	Binary 8-Bit Number (22)
79	Byte	Bytes/Elements	Binary 8-Bit Number (2)
80	I*2	Units Code	Combination of a Zero Filled Byte and Unit Code (51)
81	Byte	Mult. Mantissa	Binary 8-Bit Number (1)
82	Byte	Exponent	Binary 8-Bit Number (0)
83	I*2	Additive Constant	Binary Number (0)
84	C*4	Hour of Ascending Node	Character String "AHR"
85	Byte	Start Byte	Binary 8-Bit Number (24)
86	Byte	Bytes/Elements	Binary 8-Bit Number (1)
87	I*2	Units Code	Combination of a Zero Filled Byte and Unit Code (50)
88	Byte	Mult. Mantissa	Binary 8-Bit Number (1)
89	Byte	Exponent	Binary 8-Bit Number (0)
90	I*2	Additive Constant	Binary Number (0)
91	C*4	Minute of Amending AMN (blank)	Character String Node
92	Byte	Start Byte	Binary 8-Bit Number (25)

Data Word	Type	Contents	Comments
93	Byte	Bytes/Elements	Binary 8-Bit Number (1)
94	I*2	Units Code	Combination of a Zero Filled Byte and Unit Code (49)
95	Byte	Mult. Mantissa	Binary 8-Bit Number (1)
96	Byte	Exponent	Binary 8-Bit Number (0)
97	I*2	Additive Constant	Binary Number (0)
98	C*4	Second Of Ascending Node	Character String "ASEC"
99	Byte	Start Byte	Binary 8-Bit Number (26)
100	Byte	Bytes/Elements	Binary 8-Bit Number (1)
101	I*2	Units Code	Combination of a Zero Filled Byte and Unit Code (12)
102	Byte	Mult. Mantissa	Binary 8-Bit Number (1)
103	Byte	Exponent	Binary 8-Bit Number (0)
104	I*2	Additive Constant	Binary Number (0)
105	C*4	Logical Satellite	Character String "LSI"
106	Byte	Start Byte	Binary 8-Bit Number (27)
107	Byte	Bytes/Elements	Binary 8-Bit Number (1)
108	I*2	Units Code	Combination of a Zero Filled Byte and Unit Code (19)
109	Byte	Mult. Mantissa	Binary 8-Bit Number (1)
110	Byte	Exponent	Binary 8-Bit Number (0)
111	I*2	Additive Constant	Binary Number (0)
112	I*2	Checksum	Binary Number

EDR Scan Header Data Description Block

Data Word	Type	Contents	Comments
1	I*2	Block Length	Length of Block in Terms of I*2 words (17)
2	Byte	MODE	Binary 8-Bit Number (3)
3	Byte	SUBMODE	Binary 8-Bit Number (17)
4	Byte	Number of Elements	Binary 8-Bit Number (2)
5	Byte	Bytes per Section	Binary 8-Bit Number (6)
6	I*2	Number of Section	Binary Number (1)
7	C*4	Counter	Character String "CNTR"
8	Byte	Start Byte	Binary 8-Bit Number (4)
9	Byte	Bytes/Elements	Binary 8-Bit Number (2)
10	I*2	Units Code	Combination of a Zero Filled Byte and Unit Code (12)
11	Byte	Mult. Mantissa	Binary 8-Bit Number (1)
12	Byte	Exponent	Binary 8-Bit Number (0)
13	I*2	Additive Constant	Binary Number
14	C*4	B-Scan Start Time	Character String "BSTM"
15	Byte	Start Byte	Binary 8-Bit Number (6)
16	Byte	Bytes/Elements	Binary 8-Bit Number (4)
17	I*2	Units Code	Combination of a Zero Filled Byte and Unit Code (12)
18	Byte	Mult. Mantissa	Binary 8-Bit Number (1)
19	Byte	Exponent	Binary 8-Bit Number (0)
20	I*2	Additive Constant	Binary Number
21	I*2	Checksum	Calculated in "SMIDEF"

EDR Data Description Block

Data Word	Type	Contents	Comments
1	I*2	Block Length	Length of Block in Terms of I*2 words (107)
2	Byte	Mode	Binary 8-Bit Number (3)
3	Byte	submode	Binary 8-Bit Number (17)
4	Byte	Number of Elements	Binary 8-Bit Number (17)
5	Byte	Bytes per Section	Binary 8-Bit Number (20)
6	I*2	Number of Section	Binary Number (62)
7	C*4	Counter	Character String "CNTR"
8	Byte	Start Byte	Binary 8-Bit Number (4)
9	Byte	Bytes/Elements	Binary 8-Bit Number (2)
10	I*2	Units Code	Combination of a Zero Filled Byte and Unit Code (19)
11	Byte	Mult. Mantissa	Binary 8-Bit Number (1)
12	Byte	Exponent	Binary 8-Bit Number (0)
13	I*2	Additive Constant	Binary Number (0)
14	C*4	Latitude	Character String "LAT"
15	Byte	Start Byte	Binary 8-Bit Number (6)
16	Byte	Bytes/Elements	Binary 8-Bit Number (2)
17	I*2	Units Code	Combination of a Zero Filled Byte and Unit Code (45)
18	Byte	Mult. Mantissa	Binary 8-Bit Number (1)
19	Byte	Exponent	Binary 8-Bit Number (-2)
20	I*2	Additive Constant	Binary Number (0)
21	C*4	Longitude	Character String "LON"
22	Byte	Start Byte	Binary 8-Bit Number (8)

Data Word	Type	Contents	Comments
23	Byte	Bytes/Elements	Binary 8-Bit Number (2)
24	I*2	Units Code	Combination of a Zero Filled Byte and Unit Code (45)
25	Byte	Mult. Mantissa	Binary 8-Bit Number (1)
26	Byte	Exponent	Binary 8-Bit Number (-2)
27	I*2	Additive Constant	Binary Number (0)
28	C*4	Surface Type	Character String "STYP"
29	Byte	Start Byte	Binary 8-Bit Number (10)
30	Byte	Bytes/Elements	Binary 8-Bit Number (1)
31	I*2	Units Code	Combination of a Zero Filled Byte and Unit Code (19)
32	Byte	Mult. Mantissa	Binary 8-Bit Number (1)
33	Byte	Exponent	Binary 8-Bit Number (0)
34	I*2	Additive Constant	Binary Number (0)
35	C*4	Cloud Water	Character String "CW"
36	Byte	Start Byte	Binary 8-Bit Number (11)
37	Byte	Bytes/Elements	Binary 8-Bit Number (1)
38	I*2	Units Code	Combination of a Zero Filled Byte and Unit Code (22)
39	Byte	Mult. Mantissa	Binary 8-Bit Number (5)
40	Byte	Exponent	Binary 8-Bit Number (-2)
41	I*2	Additive Constant	Binary Number (0)
42	C*4	Spare	Character String "SPAR"
43	Byte	Start Byte	Binary 8-Bit Number (12)
44	Byte	Bytes/Elements	Binary 8-Bit Number (1)
45	I*2	Units Code	Combination of a Zero Filled Byte and Unit Code (22)

Data Word	Type	Contents	Comments
46	Byte	Mult. Mantissa	Binary 8-Bit Number (1)
47	Byte	Exponent	Binary 8-Bit Number (-1)
48	I*2	Additive Constant	Binary Number (0)
49	C*4	Rain Rate	Character String "RR"
50	Byte	Start Byte	Binary 8-Bit Number (13)
51	Byte	Bytes/Elements	Binary 8-Bit Number (1)
52	I*2	Units Code	Combination of a Zero Filled Byte and Unit Code (62)
53	Byte	Mult. Mantissa	Binary 8-Bit Number (1)
54	Byte	Exponent	Binary 8-Bit Number (0)
55	I*2	Additive Constant	Binary Number (0)
56	C*4	Surface Wind	Character String "SW"
57	Byte	Start Byte	Binary 8-Bit Number (14)
58	Byte	Bytes/Elements	Binary 8-Bit Number (1)
59	I*2	Units Code	Combination of a Zero Filled Byte and Unit Code (4)
60	Byte	Mult. Mantissa	Binary 8-Bit Number (1)
61	Byte	Exponent	Binary 8-Bit Number (1)
62	I*2	Additive Constant	Binary Number (0)
63	C*4	Surface Moisture	Character "SM"
64	Byte	Start Byte	Binary 8-Bit Number (15)
65	Byte	Bytes/Elements	Binary 8-Bit Number (1)
66	I*2	Units Code	Combination of a Zero Filled Byte and Unit Code (39)
67	Byte	Mult. Mantissa	Binary 8-Bit Number (1)
68	Byte	Exponent	Binary 8-Bit Number (0)

Data

Word	Type	Contents	Comments
69	I*2	Additive Constant	Binary Number (0)
70	C*4	Ice Concentration	Character String "IC"
71	Byte	Start Byte	Binary 8-Bit Number (16)
72	Byte	Bytes/Elements	Binary 8-Bit Number (1)
73	I*2	Units Code	Combination of a Zero Filled Byte and Unit Code (20)
74	Byte	Mult. Mantissa	Binary 8-Bit Number (5)
75	Byte	Exponent	Binary 8-Bit Number (0)
76	I*2	Additive Constant	Binary Number (0)
77	C*4	Ice Age	Character String "IA"
78	Byte	Start Byte	Binary 8-Bit Number (17)
79	Byte	Bytes/Elements	Binary 8-Bit Number (1)
80	I*2	Units Code	Combination of a Zero Filled Byte and Unit Code (19)
81	Byte	Mult. Mantissa	Binary 8-Bit Number (1)
82	Byte	Exponent	Binary 8-Bit Number (0)
83	I*2	Additive Constant	Binary Number (0)
84	C*4	Ice Edge	Character String "IE"
85	Byte	Start Byte	Binary 8-Bit Number (18)
86	Byte	Bytes/Elements	Binary 8-Bit Number (1)
87	I*2	Units Code	Combination of a Zero Filled Byte and Unit Code (19)
88	Byte	Mult. Mantissa	Binary 8-Bit Number (1)
89	Byte	Exponent	Binary 8-Bit Number (0)
90	I*2	Additive Constant	Binary Number (0)
91	C*4	Water Vapor Ocean	Character String "WV"
92	Byte	Start Byte	Binary 8-Bit Number (19)

Data Word	Type	Contents	Comments
93	Byte	Bytes/Elements	Binary 8-Bit Number (1)
94	I*2	Units Code	Combination of a Zero Filled Byte and Unit Code (22)
95	Byte	Mult. Mantissa	Binary 8-Bit Number (5)
96	Byte	Exponent	Binary 8-Bit Number (-1)
97	I*2	Additive Constant	Binary Number (0)
98	C*4	Surface Temp.	Character "TMPS"
99	Byte	Start Byte	Binary 8-Bit Number (20)
100	Byte	Bytes/Elements	Binary 8-Bit Number (1)
101	I*2	Units Code	Combination of a Zero Filled Byte and Unit Code (1)
102	Byte	Mult. Mantissa	Binary 8-Bit Number (1)
103	Byte	Exponent	Binary 8-Bit Number (0)
104	I*2	Additive Constant	Binary Number (180)
105	C*4	Snow Depth	Character String "SD"
106	Byte	Start Byte	Binary 8-Bit Number (21)
107	Byte	Bytes/Elements	Binary 8-Bit Number (1)
108	I*2	Units Code	Combination of a Zero Filled Byte and Unit Code (39)
109	Byte	Mult. Mantissa	Binary 8-Bit Number (5)
110	Byte	Exponent	Binary 8-Bit Number (0)
111	I*2	Additive Constant	Binary Number (0)
112	C*4	Rain Flag	Character String "RFLG"
113	Byte	Start Byte	Binary 8-Bit Number (19)
114	Byte	Bytes/Elements	Binary 8-Bit Number (1)
115	I*2	Units Code	Combination of a Zero Filled Byte and Unit Code (22)

116	Byte	Mult. Mantissa	Binary 8-Bit Number (1)
117	Byte	Exponent	Binary 8-Bit Number (0)

Data Word	Type	Contents	Comments
118	I*2	Additive Constant	Binary Number (0)
119	C*4	EDR Surface Type	Character String "ETYP"
120	Byte	Start Byte	Binary 8-Bit Number (23)
121	Byte	Bytes/Elements	Binary 8-Bit Number (1)
122	I*2	Units Code	Combination of a Zero Filled Byte and Unit Code (19)
123	Byte	Mult. Mantissa	Binary 8-Bit Number (1)
124	Byte	Exponent	Binary 8-Bit Number (0)
125	I*2	Additive Constant	Binary Number (0)
126	C*4	CheckSum	Binary Number

Rev Header Data Description Block

Data Word	Type	Contents	Comments
1	I*2	Block Length	Length of Block in Terms of I*2 words (15)
2	Byte	Mode	Binary 8-Bit Number
3	Byte	Submode	String of 4 characters
4	I*4	Spacecraft ID	Two 16-Bit Words
5	I*4	Revolution/Orbit	Binary 32-Bit Number
6	I*2	Julian day Data Begins	Binary 8-Bit Number
7	Byte	HR Data Begins	Binary 8-Bit Number
8	Byte	Min Data Begins	Binary 8-Bit Number
9	Byte	Sec Data Begins	Binary 8-Bit Number
10	Byte	Day Data Ends(1)	Binary 8-Bit Number
11	Byte	Day Data Ends(2)	Binary 8-Bit Number
12	Byte	HR Data Ends	Binary 8-Bit Number
13	Byte	Min Data Ends	Binary 8-Bit Number
14	Byte	Sec. Data Ends	Binary 8-Bit Number
15	I*2	Julian day of First	Binary 16-Bit Number Ascending Node
16	Byte	HR First A.N.	Binary 8-Bit Number
17	Byte	Min First A.N.	Binary 8-Bit Number
18	Byte	Sec First A.N.	Binary 8-Bit Number
19	Byte	Logical Satellite Id	Binary 8-Bit Number
20	I*2	Checksum	Binary 16-Bit Number

2.1.4 Data Record Format Description

The data record consists of a Scan Header Block and an EDR Data Block and found in records 2 through the end of the data set (see 2.1.3).

The EDR Scan Header has the Scan Counter which is a binary number (1 through 1724) and the B-SCAN start time is in minutes from the beginning of the day (0 to 86,400). NOTE: There are no A-Scan times associated with these data sets.

The Data Block format is based upon 64 view spots per SCAN and contains a Latitude/Longitude value along with 14 parameters of which one is a spare. All parameters such as ice concentration of 0 at the Equator, are available for each of the view spots.

EDR Scan Header Block

Data Word	Type	Contents	Comments
1	I*2	Block Length	Length of Block in Terms of Words (6)
2	Byte	Mode	8-Bit Byte
3	Byte	Submode	8-Bit Byte
4	I*2	Scan Counter	Binary 16-Bit Word
5	I*4	B-Scan Start Time	Binary 32-Bit Number (seconds)
6.	I*2	Checksum	Binary 16-Bit Word

EDR Data Block Format

Data Word	Type	Contents	Comments
1	I*2	Block Length	Length of Block in Terms of Words (623)
2	Byte	Mode	8-Bit Byte
3	Byte	Submode	8-Bit Byte
4	I*2	All Scene Station Counter	8-Bit Byte
5	I*2	Latitude	Scene Station Latitude 1x10 to the power of –2
6	I*2	Longitude	Scene Station Longitude 1X10 to the power of -2
7	Byte	Surface Tag	Binary 8-Bit Number
8	Byte	Cloud Water	Cloud Water Over Ocean 5x10 to power of -2 Kilogram per Cubic Meter
9	Byte	Spare	Binary 8-Bit Number (0)
10	Byte	Rain Rate	Rain Rate in mm per hour
11	Byte	Wind Speed	Surface Wind Speed over the Ocean meters per sec
12	Byte	Soil Moisture	Soil Moisture in mm
13	Byte	Ice Concentration	Sea Ice Concentration
14	Byte	Ice Age	Sea Ice Age
15	Byte	Ice Edge	Sea Ice Flag
16	Byte	Water Vapor	Water Vapor over the Ocean 5x10 to the power of -1 Kilogram per square meter
17	Byte	Surface Temperature	Surface Temperature degree Kelvin

18	Byte	Snow Depth	Snow depth in mm

Data Word	Type	Contents	Comments
19	Byte	Rain Flag	Binary 8-Bit Number
20	Byte	Cal. Surface Type	Calculated Surface Type
21	Repeat	Bytes	Repeat Word 4 to 20 61 times
22	I*2	Checksum	Binary 16-Bit Word

3.0 Programmer Note: How to obtain several of the important parameters for processing an orbit.

The year of the date is found in 1 place only. The first record of each sequence in 16-bit word 11 (bytes 21,22).

Times associated with the data:

Starting Julian Day 16 bit word 253 in (Rev Header Block)
Starting Hour 8-bit word (byte) 507 in (Rev Header Block)
Starting Minute 8-bit word (byte) 508 in (Rev Header Block)
Starting Second 8-bit word (byte) 509 in (Rev Header Block).

Ending Hour 8-bit word (byte) 512
Ending Minute 8-bit word (byte) 513
Ending Second 8-bit word (byte) 514

The number of data blocks (scan lines) can be found in 16-bit word 22 (bytes 43,44) of the directory record.

The orbit number is given only once and is in 32-bit word 126; or 16-bit word 252 (bytes 503, 504) of the directory record.

The parameters of time, latitude and longitude of the data record 2-1725 each sequence) need special consideration.

The times are given in terms of seconds during the day of zero to 86,400. It appears that a data set will not extend beyond a day boundary.

The Latitudes are in terms of degrees at the South Pole to 90 degrees at the Equator and 180 degrees at the North Pole. The actual binary numbers in the data sets are scaled by 100 (e.g. Equator is 9000).

The Longitudes are in terms of 0 to 360 and are also scaled by 100. Computation of the longitude is complicated because numbers as great to 36,000 extend into the sign bit of a 16-bit word making the number negative. It will have to be treated as an unsigned integer.

EDR SHARED PROCESSING FRAME

FIRST FRAME

Product ID Block	Data Sequence Block	Data Description Block	Data Description Block	Data Description Block	Data Block	Data Block	Data Block	Data Block	Data Block	Data Block	Fill "A5"
		Pass HRD	Scan HRD	EDR	Pass HRD	Scan HRD	EDR	Scan HDR	EDR	Scan HDR	
28	26	190	34	214	30	12	1286	12	1286	12	582

SECOND FRAME

Data Block	Data Block	Data Block	Data Block	Data Block	Data Block	Data Block	Data Block	Fill "A5"
EDR	Scan HRD	EDR	Scan HRD	EDR	Scan HRD	EDR	Scan HRD	
1286	12	1286	12	1286	12	1286	12	1116

12,798 Byte Field

12,798

LAST FRAME

Data Block	Data Block		Data Block	Data Block	End Product Block	"Zero" Fill
EDR	Scan HRD		Scan HRD	EDR		
1286	12		12	1286	6	X

IDB OUTPUT RECORD

12 BYTES	1300 BYTES	2 BYTE FILL

THIS PAGE INTENTIONALLY LEFT BLANK

APPENDIX A

EDR PRODUCT IDENTIFICATION BLOCK

BYTES		
0-1	BLOCK LENGTH 14	
2-3	MODE 1	SUBMODE 1
4-5	CHAR.1 F	CHAR.2 N
6-7	CHAR.3 O	CHAR.4 C
8-9	CLASSIFICATION U	FILE LIFETIME 255
10-11	FILE INDICATOR T	CHAR.2 S
12-13	CHAR.3 M	CHAR.4 I
14-15	CHAR.5 E	CHAR.6 D
16-17	CHAR.7 R	CHAR.8
18-19	CHAR.9	CHAR.10 8
20-21	YEAR (SET BY SMIDEF)	
22-23	MONTH (SET BY SMIDEF)	DAY (SET BY SMIDEF)
24-25	HOUR (SET IN SMIDEF)	MINUTE (SET IN SMIDEF)
26-27	CHECKSUM (CAL. IN SMIDEF)	

EDR DATA SEQUENCE BLOCK

BYTES		
0-1	BLOCK LENGTH 13	
2-3	MODE 3	SUBMODE 19
4-5	NUMBER OF LOOPS 3	
6-7	START {	LOOP NUMBER 1
8-9	NUMBER OF DATA BLOCKS 1	
10-11	END }	LOOP NUMBER 1
12-13	START {	LOOP NUMBER 2
14-15	NUMBER OF DATA BLOCKS (SET IN SMIDEF)	
16-17	START {	LOOP NUMBER 3
18-19	NUMBER OF DATA BLOCKS 1	
20-21	END }	LOOP NUMBER 3
22-23	END }	LOOP NUMBER 2
24-25	CHECKSUM (CALC. IN SMIDEF)	

REV HEADER DATA DESCRIPTION BLOCK

BYTES		
0-1	BLOCK LENGTH 95	
2-3	MODE 3	SUBMODE 17
4-5	NUMBER ELEMENTS 15	BYTES/ SECTION 24
6-7	NUMBER OF SECTIONS 1	
8-9	CHAR.1 S	CHAR.2 C
10-11	CHAR.3 I	CHAR.4 D
12-13	START BYTE 4	BYTES/ ELEMENTS 4
14-15	UNUSED 0	UNITS CODE 19
18-19	ADDITIVE CONSTANT 0	
20-21	CHAR.1 R	CHAR.2 E
22-23	CHAR.3 V	CHAR.4 #
24-25	START BYTE 8	BYTES/ ELEMENTS 4
26-27	UNUSED 0	UNITS CODE 19
28-29	MULT. MANTISSA 1	EXPONENT 0
30-31	ADDITIVE CONSTANT 0	
32-33	CHAR.1 B	CHAR.2 J

REV HEADER DATA DESCRIPTION BLOCK (CONTINUED)

BYTES		
34-35	CHAR.3 L	CHAR.4 D
36-37	START BYTE 12	BYTES/ ELEMENTS 2
38-39	UNUSED 0	UNITS CODE 51
40-41	MULT. MANTISSA 1	EXPONENT 0
42-43	ADDITIVE CONSTANT 0	
44-45	CHAR.1 B	CHAR.2 H
46-47	CHAR.3 R	CHAR.4
48-49	START BYTE 14	BYTES/ ELEMENTS 1
50-51	UNUSED 0	UNITS CODE 50
52-53	MULT. MANTISSA 1	EXPONENT 0
54-55	ADDITIVE CONSTANT 0	
56-57	CHAR.1 B	CHAR.2 M
58-59	CHAR.3 N	CHAR.4
60-61	START BYTE 15	BYTES/ ELEMENT 1
62-63	UNUSED 0	UNITS CODE 49

REV HEADER DATA DESCRIPTION BLOCK (CONTINUED)

BYTES		
64-65	MULT. MANTISSA 1	EXPONENT 0
66-67	ADDITIVE CONSTANT 0	
68-69	CHAR.1 B	CHAR.2 S
70-71	CHAR.3 E	CHAR.4 C
72-73	START BYTE 16	BYTES/ ELEMENTS 1
74-75	UNUSED 0	UNITS CODE 12
76-77	MULT. MANTISSA 1	EXPONENT 0
78-79	ADDITIVE CONSTANT 0	
80-81	CHAR.1 E	CHAR.2 J
82-83	CHAR.3 L	CHAR.4 D
84-85	START BYTE 17	BYTES/ ELEMENTS 2
86-87	UNUSED O	UNITS CODE 51
88-89	MULT. MANTISSA 1	EXPONENT 0
90-91	ADDITIVE CONSTANT 0	
92-93	CHAR.1 E	CHAR.2 H
94-95	CHAR.3 R	CHAR.4

REV HEADER DATA DESCRIPTION BLOCK (CONTINUED)

BYTES		
96-97	START BYTE 19	BYTES/ ELEMENTS 1
98-99	UNUSED 0	UNITS CODE 50
100-101	MULT. MANTISSA 1	EXPONENT 0
102-103	ADDITIVE CONSTANT 0	
104-105	CHAR.1 E	CHAR.2 M
106-107	CHAR.3 N	CHAR.4
108-109	START BYTE 20	BYTES/ ELEMENTS 1
110-111	UNUSED 0	UNITS CODE 49
112-113	MULT. MANTISSA 1	EXPONENT 0
114-115	ADDITIVE CONSTANT 0	
116-117	CHAR.1 E	CHAR.2 S
118-119	CHAR.3 E	CHAR.4 C
120-121	START BYTE 21	BYTES ELEMENTS 1
122-123	UNUSED 0	UNITS CODE 12
124-125	MULT. MANTISSA 1	EXPONENT 0

REV HEADER DATA DESCRIPTION BLOCK (CONTINUED)

BYTES		
126-127	ADDITIVE CONSTANT 0	
128-129	CHAR.1 A	CHAR.2 J
130-131	CHAR.3 L	CHAR.4 D
132-133	START BYTE 22	BYTE/ ELEMENTS 2
134-135	UNUSED 0	UNITS CODE 51
136-137	MULT. MANTISSA 1	EXPONENT 0
138-139	ADDITIVE CONSTANT 0	
140-141	CHAR.1 A	CHAR.2 H
142-143	CHAR.3 R	CHAR.4
144-145	START BYTE 24	BYTES/ ELEMENT 1
146-147	UNUSED 0	UNITS CODE 50
148-149	MULT. MANTISSA 1	EXPONENT 0
150-151	ADDITIVE CONSTANT 0	
152-153	CHAR.1 A	CHAR.2 M
154-155	CHAR.3 N	CHAR.4
156-157	START BYTE 25	BYTES/ ELEMENTS 1

REV HEADER DATA DESCRIPTION BLOCK (CONTINUED)

BYTES		
158-159	UNUSED 0	UNITS CODE 49
160-161	MULT. MANTISSA 1	EXPONENT 0
162-163	ADDITIVE CONSTANT 0	
164-165	CHAR.1 A	CHAR.2 S
166-167	CHAR.3 E	CHAR.4 C
168-169	START BYTE 26	BYTES/ ELEMENTS 1
170-171	UNUSED O	UNITS CODE 2
172-173	MULT. MANTISSA 1	EXPONENT 0
174-175	ADDITIVE CONSTANT 0	
176-177	CHAR.1 L	CHAR.2 S
178-179	CHAR.3 I	CHAR.4
180-181	START BYTE 27	BYTES/ ELEMENTS 12
182-183	UNUSED 0	UNITS CODE 19
184-185	MULT. MANTISSA 1	EXPONENT 0
186-187	ADDITIVE CONSTANT 0	
188-189	CHECKSUM (CALC. IN SMIDEF)	

EDR SCAN HEADER DATA DESCRIPTION BLOCK

BYTES		
0-1	BLOCK LENGTH 17	
2-3	MODE 3	SUBMODE 17
4-5	NUMBER ELEMENTS 2	BYTES/ SECTION 6
6-7	NUMBER OF SECTIONS 1	
8-9	CHAR.1 C	CHAR.2 N
10-11	CHAR.3 T	CHAR.4 R
12-13	START BYTE 4	BYTES/ ELEMENTS 2
14-15	UNUSED 0	UNITS CODE 19
16-17	MULT. MANTISSA 1	EXPONENT 0
18-19	ADDITIVE CONSTANT 0	
20-21	CHAR.1 B	CHAR.2 S
22-23	CHAR.3 T	CHAR.4 M
24-25	START BYTE 6	BYTES/ ELEMENTS 4
26-27	UNUSED 0	UNITS CODE 12
28-29	MULT. MANTISSA 1	EXPONENT 0
30-31	ADDITIVE CONSTANT 0	
32-33	CHECKSUM (CAL. IN SMIDEF)	

EDR DATA DESCRIPTION BLOCK

BYTES		
0-1	BLOCK LENGTH 107	
2-3	MODE 3	SUBMODE 17
4-5	NUMBER ELEMENTS 17	BYTES/ SECTION 20
6-7	NUMBER OF SECTIONS 62	
8-9	CHAR.1 C	CHAR.2 N
10-11	CHAR.3 T	CHAR.4 R
12-13	START BYTE 4	BYTES/ ELEMENTS 2
14-15	UNUSED 0	UNITS CODE 19
16-17	MULT. MANTISSA 1	EXPONENT 0
18-19	ADDITIVE CONSTANT 0	
20-21	CHAR.1 L	CHAR.2 A
22-23	CHAR.3 T	CHAR.4
24-25	START BYTE 6	BYTES/ ELEMENTS 2
26-27	UNUSED 0	UNITS CODE 4
28-29	MULT. MANTISSA 1	EXPONENT -2
30-31	ADDITIVE CONSTANT 0	

EDR DATA DESCRIPTION BLOCK (CONTINUED)

BYTES		
32-33	CHAR.1 L	CHAR.2 O
34-35	CHAR.3 N	CHAR.4
36-37	START BYTE 8	BYTES/ ELEMENTS 2
38-39	UNUSED 0	UNITS CODE 45
40-41	MULT. MANTISSA 1	EXPONENT -2
42-43	ADDITIVE CONSTANT 0	
44-45	CHAR.1 S	CHAR.2 T
46-47	CHAR.3 Y	CHAR.4 P
48-49	START BYTE 10	BYTES/ ELEMENTS 1
50-51	UNUSED 0	UNITS CODE 19
52-53	MULT. MANTISSA 1	EXPONENT 0
54-55	ADDITIVE CONSTANT 0	
56-57	CHAR.1 C	CHAR.2 W
58-59	CHAR.3	CHAR.4
60-61	START BYTE 11	BYTES/ ELEMENT 1
62-63	UNUSED 0	UNITS CODE 22

EDR DATA DESCRIPTION BLOCK (CONTINUED)

BYTES		
64-65	MULT. MANTISSA 5	EXPONENT -2
66-67	ADDITIVE CONSTANT 0	
68-69	CHAR.1 S	CHAR.2 P
70-71	CHAR.3 A	CHAR.4 R
72-73	START BYTE 12	BYTES/ ELEMENTS 1
74-75	UNUSED 0	UNITS CODE 22
76-77	MULT. MANTISSA 1	EXPONENT -1
78-79	ADDITIVE CONSTANT 0	
80-81	CHAR.1 R	CHAR.2 R
82-83	CHAR.3	CHAR.4
84-85	START BYTE 13	BYTES/ ELEMENTS 1
86-87	UNUSED 0	UNITS CODE 62
88-89	MULT. MANTISSA 1	EXPONENT 0
90-91	ADDITIVE CONSTANT 0	
92-93	CHAR.1 S	CHAR.2 W
94-95	CHAR.3	CHAR.4

EDR DATA DESCRIPTION BLOCK (CONTINUED)

BYTES		
96-97	START BYTE 14	BYTES/ ELEMENTS 1
98-99	UNUSED 0	UNITS CODE 4
100-101	MULT. MANTISSA 1	EXPONENT 0
102-103	ADDITIVE CONSTANT 0	
104-105	CHAR.1 S	CHAR.2 M
106-107	CHAR.3	CHAR.4
108-109	START BYTE 15	BYTES/ ELEMENTS 1
110-111	UNUSED 0	UNITS CODE 19
112-113	MULT. MANTISSA 1	EXPONENT 0
114-115	ADDITIVE CONSTANT 0	
116-117	CHAR.1 I	CHAR.2 C
118-119	CHAR.3	CHAR.4
120-121	START BYTE 16	BYTES ELEMENTS 1
122-123	UNUSED 0	UNITS CODE 19
124-125	MULT. MANTISSA 1	EXPONENT 0

EDR DESCRIPTION BLOCK (CONTINUED)

BYTES		
126-127	ADDITIVE CONSTANT 0	
128-129	CHAR.1 I	CHAR.2 A
130-131	CHAR.3	CHAR.4
132-133	START BYTE 17	BYTE/ ELEMENTS 1
134-135	UNUSED 0	UNITS CODE 19
136-137	MULT. MANTISSA 1	EXPONENT 0
138-139	ADDITIVE CONSTANT 0	
140-141	CHAR.1 I	CHAR.2 E
142-143	CHAR.3	CHAR.4
144-145	START BYTE 18	BYTES/ ELEMENT 1
146-147	UNUSED 0	UNITS CODE 19
148-149	MULT. MANTISSA 1	EXPONENT 0
150-151	ADDITIVE CONSTANT 0	
152-153	CHAR.1 W	CHAR.2 V
154-155	CHAR.3	CHAR.4
156-157	START BYTE 19	BYTES/ ELEMENTS 1

EDR DESCRIPTION BLOCK (CONTINUED)

BYTES		
158-159	UNUSED 0	UNITS CODE 22
160-161	MULT. MANTISSA 5	EXPONENT -1
162-163	ADDITIVE CONSTANT 0	
164-165	CHAR.1 T	CHAR.2 M
166-167	CHAR.3 P	CHAR.4 S
168-169	START BYTE 20	BYTES/ ELEMENTS 1
170-171	UNUSED 0	UNITS CODE 1
172-173	MULT. MANTISSA 1	EXPONENT 0
174-175	ADDITIVE CONSTANT 0	
176-177	CHAR.1 S	CHAR.2 P
178-179	CHAR.3 A	CHAR.4 R
180-181	START BYTE 21	BYTES/ ELEMENTS 1
182-183	UNUSED 0	UNITS CODE 8
184-185	MULT. MANTISSA 1	EXPONENT 0
186-187	ADDITIVE CONSTANT 0	
188-189	CHAR.1 R	CHAR.2 F

EDR DESCRIPTION BLOCK (CONTINUED)

BYTES		
190-191	CHAR.3 L	CHAR.4 G
192-193	START BYTE 22	BYTES/ ELEMENTS 1
194-195	UNUSED 0	UNITS CODE 22
196-197	MULT. MANTISSA 1	EXPONENT 0
198-199	ADDITIVE CONSTANT 0	
200-201	CHAR.1 E	CHAR.2 T
202-203	CHAR.3 Y	CHAR.4 P
204-205	START BYTE 23	BYTES/ ELEMENTS 1
206-207	UNUSED 0	UNITS CODE 19
208-209	MULT. MANTISSA 1	EXPONENT 0
210-211	ADDITIVE CONSTANT 0	
212-213	CHECKSUM (CALC. IN SMIDEF)	

REV HEADER DATA BLOCK FORMAT

BYTES		
0-1	BLOCK LENGTH	
2-3	BLOCK ID	
4-7	SPACECRAFT ID	
8-11	REVOLUTION/ ORBIT NUMBER	
12-13	JULIAN DAY DATA BEGINS	
14-15	HR. DATA BEGINS	MIN. DATA BEGINS
16-17	SEC. DATA BEGINS	DAY DATA ENDS (1)
18-19	DAY DATA ENDS (2)	HR DATA ENDS
20-21	MIN. DATA ENDS	SEC. DATA ENDS
22-23	JULIAN DAY OF 1st ASCENDING NODE	
24-25	HR. 1st A.N	MIN 1st A.N
26-27	SEC. 1st A.N	LOGICAL SAT. ID
28-29	CHECKSUM	

THIS PAGE INTENTIONALLY LEFT BLANK

APPENDIX B

EDR SCAN HEADER BLOCK FORMAT

BYTES	
0-1	BLOCK LENGTH
2-3	BLOCK ID
4-5	SCAN COUNTER
6-9	B-SCAN START TIME
10-11	CHECKSUM

EDR DATA FORMAT BLOCK

BYTES		
0-1	BLOCK LENGTH 623	
2-3	BLOCK ID	
4-5	ALL SCENE STATION COUNTER	
6-7	LATITUDE	
8-9	LONGITUDE	
10-11	SURFACE TAG	CLOUD WATER
12-13	SPARE	RAIN RATE
14-15	WIND SPEED	SOIL MOISTURE
16-17	ICE CONC.	ICE AGE
18-19	ICE EDGE	WATER VAPOR
20-21	SURFACE TEMP.	SPARE
22-23	RAIN FLAG	CALC. S. TYPE
24-1283	(REPEAT BYTES 4-23 63 TIMES)	
1284-1285	CHECKSUM	

EXHIBIT F

Geostationary Meteorological Satellite

(Japan)

THIS PAGE INTENTIONALLY LEFT BLANK

EXHIBIT G

METEOSAT
Geostationary Meteorological Satellite

(European)

THIS PAGE INTENTIONALLY LEFT BLANK